INSTALLATION INSTRUCTIONS

MAKE: GM
MODEL: Colorado/Canyon
YEAR: 2016
ENGINE: I4-2.8L (td) Duramax
FITS: CC/SB 128.3"WB , CC/LB 140.5"WB

3-1/2" DPF-Back Aluminized
49-04064-P (Polished Tip)
49-04064-B (Black Tip)
3-1/2" DPF-Back Stainless Steel
49-44064-P (Polished Tip)
49-44064-B (Black Tip)

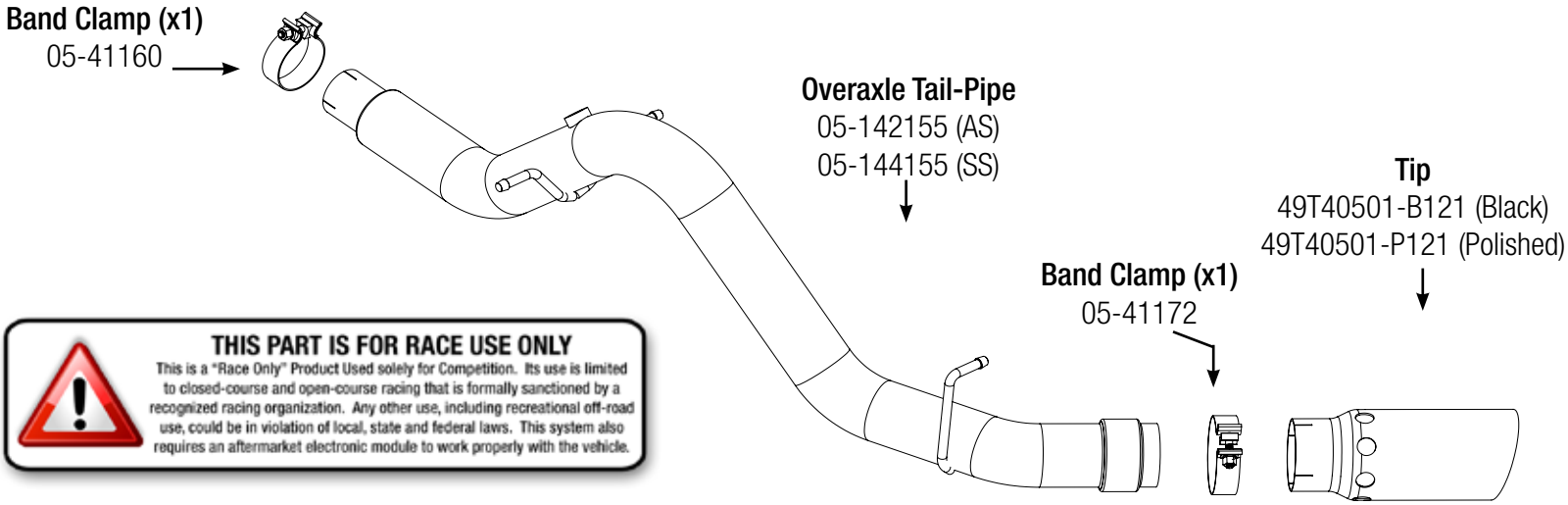

THIS PART IS FOR RACE USE ONLY
This is a "Race Only" Product Used solely for Competition. Its use is limited to closed-course and open-course racing that is formally sanctioned by a recognized racing organization. Any other use, including recreational off-road use, could be in violation of local, state and federal laws. This system also requires an aftermarket electronic module to work properly with the vehicle.

Caution: Allow time for your vehicle to cool down prior to installation. When working on or under your vehicle proceed with caution. Exhaust systems reach high temperatures and may cause serious burns. Wear protective safety equipment; eye goggles and gloves to ensure a safe installation.

Step 1: (Read Instructions prior to installation) for faster removal and installation of exhaust a trained professional is recommended for this procedure. Secure DPF (Diesel Particulate Filter) with jack/stands. The stock exhaust system will require cutting therefore professional assistance and proper tube cutting tools is always recommended.

Step 2: Using a visible ink; measure 6" inches back from the rear weld of the DPF for the CC/SB (128.3" WB) and place a mark. (**As shown in Figure A**) the mark will indicate your cut location. Ensure the measurement is accurate and the mark is clearly visible.

Figure A

Please note: FOR CC/LB (140.5" WB) MEASURE 18" INCHES BACK FROM THE REAR WELD OF THE DPF AND PLACE YOUR MARK TO INDICATE YOUR CUT LOCATION.

Step 3: Once you have cut the stock Over-Axle tube away from the (DPF). Remove the Nox sensor bung with a 15/16" wrench, now can remove Over-Axle safely.

Step 4: Install your aFe POWER DPF-Back system into place. Using the 2.75" band clamp provided.

Step 5: Place your intercooled tip over the expanded side of the tail-pipe and fully tighten down band clamp.

Step 6: Now, begin to align your system to desired position and tighten System down completely.

Step 7: Slip the 6" adapter over the cut section of your stock tailpipe and over the DPF Delete tube with the 4" band clamps provided in the kit.

Step 8: Your installation is now complete. It is recommended to re-tighten all exhaust components after 50-100 miles.

NOTES: aFe recommends that the tailpipe be at least 1/2"-1" away from any body panels to avoid heat related body damage. **Tighten and secure.**

Caution: Allow time for your vehicle to cool down prior to installation. When working on or under your vehicle proceed with caution. Exhaust systems reach high temperatures and may cause serious burns. Wear protective safety equipment; eye goggles and gloves to ensure a safe installation. **aFe recommends professional installation on our products.**