with Installation Instructions

# Owner's Manual

# Banks Monster® Exhaust System

## 2014-2015 Ram 6.7L Cummins Crew Cab Short Bed (6'4" Bed)

THIS MANUAL IS FOR USE WITH SYSTEMS 49775 & 49775-B

Gale Banks Engineering
546 Duggan Avenue • Azusa, CA 91702
(626) 969-9600 • Fax (626) 334-1743

Product Information & Sales: (888) 635-4565
Customer Support: (888) 839-5600
Installation Support: (888) 839-2700

**bankspower.com**

©2014 Gale Banks Engineering

12/08/14 **PN 96467** v.2.0

# General Installation Practices

**Dear Customer,**

**If you have any questions concerning the installation of your Banks Power System, please call our Technical Service Hotline at (888) 839-2700 between 7:00 am and 4:00 pm (PT). If you have any questions relating to shipping or billing, please contact our Customer Service Department at (888) 839-5600.**

**Thank you.**

**1.** For ease of installation of your Banks system, familiarize yourself with the procedure by reading the entire manual before starting work.

**2.** The general assembly diagram (**Figure 1**) provides only general guidance. Refer to each step and section diagram in this manual for proper instruction.

**3.** Throughout this manual, the left side of the vehicle refers to the driver's side, and the right side to the passenger's side.

**4.** Disconnect the ground cable from the battery (or batteries, if there are two) before beginning work.

**5.** Route and tie wires and hoses a minimum of 6" away from exhaust heat, moving parts and sharp edges. Clearance of 8" or more is recommended where possible.

**6.** When raising the vehicle, support it on properly weight-rated safety stands, ramps or a commercial hoist. Follow the manufacturer's safety precautions. Take care to balance the vehicle to prevent it from slipping or falling. When using ramps, be sure the front wheels are centered squarely on the topsides; put the transmission in park; set the hand brake; and place blocks behind the rear wheels.

**CAUTION! Do not use floor jacks to support the vehicle while working under it. Do not raise the vehicle onto concrete blocks, masonry or any other item not intended specifically for this use.**

**7.** During installation, keep the work area clean. Do not allow anything to be dropped into intake, exhaust, or lubrication system components while performing the installation, as foreign objects will cause immediate engine damage upon start-up.

## Tools Required:

- ½" and ⅜" drive ratchets with inch and metric sockets and ½" and ⅜" drive extension
- Inch and metric combination or open-end wrenches
- Standard screwdriver
- Clean shop towels or rags
- Pry-bar

## Highly recommended tools and supplies:

- Inch-pound and foot-pound torque wrenches
- oxy-acetylene torch
- Penetrating oil or light lubricant spray

# Products available from Banks Power for the 2014-15 Ram 6.7L

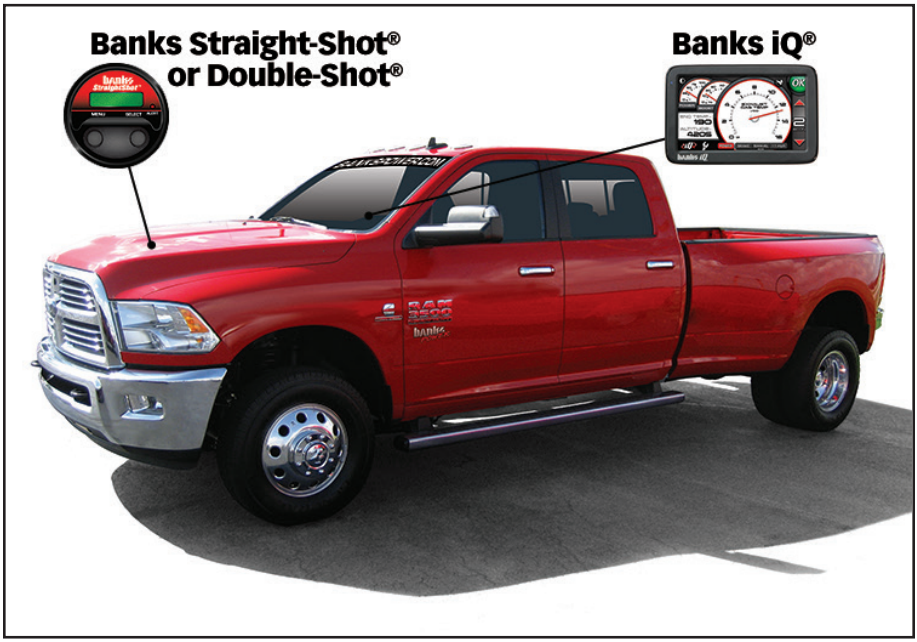


**Banks Straight-Shot®**
**Water-Methanol Injection**
**(P/N 45156)**

- Maximizes Engine Performance
- Cools Intake Temperatures
- Digital Controller (included)
- Plug-and-Play wiring
- Greater flow than the competition
- Higher Pump Volume than the competition
- Multiple configurations available

**Banks Double-Shot®**
**Water-Methanol Injection**
**(P/N 45176)**

- The Double-Shot system offers the same benefits of the Straight-Shot and adds a second stage for increased output and control.
- EGT sensor is included to serve as a trigger or auxiliary sensor.
- Multiple Tanks Sizes Available.

**Banks iQ® System**
**(P/N 61201)**

- 5" touchscreen interface
- Interchangeable gauge display, read and clear codes, monitor engine diagnostics, log data, time your vehicles runs and much more.
- Built-in rechargeable lithium-ion battery automatically charging while connected to the vehicle
- Built-in GPS antenna
- Hands-free calling
- Backup camera ready
- Navigation ready

***COMING SOON:***
**Banks Ram-Air® Intake System**

- Extensively tested & validated
- Increases air density, power & fuel economy
- Reduces exhaust gas temps (EGTs)
- Outflows stock up to 50%

**Banks Techni-Cooler® Intercooler System**

- It's all bigger: boost tubes, aluminum end tanks, inlet/outlet and core area. Much greater flow volume. Increases air density for higher continuous power.

**For More Information please call (888) 635-4565**
**or Visit us online @ www.bankspower.com**

# General Assembly Diagram

**Figure 1**

| ITEM # | PART # | DESCRIPTION | QTY |
|---|---|---|---|
| 1 | 53333 | Tailpipe, Front | 1 |
| 2 | 53334 | Tailpipe, Rear | 1 |
| 3 | 52730/52731 | Tailpipe Tip, Polished Stainless/Black | 1 |
| 4 | 52471 | Exhaust Band Clamp, 4” | 1 |
| 5 | 52476 | Exhaust Clamps, 4” | 2 |
| 6 | 96009 | Urocal, Banks Power | 2 |

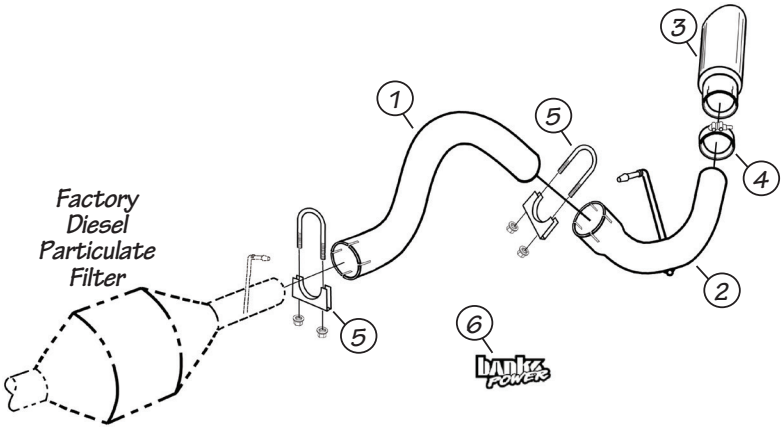

# Monster Exhaust System Installation

**1.** As a precaution, disconnect the ground of the battery (if there is more than one battery, disconnect both).

**2.** Raise the vehicle and support it with properly weight rated safety stands, ramps or a commercial hoist. Follow the manufacturer's safety precautions. Take care to balance the vehicle to prevent it from slipping or falling. When using ramps, be sure the front wheels are centered squarely on the topsides; place the transmission in park; set the parking brake and place blocks behind the rear wheels.

**CAUTION: DO NOT WORK UNDER ANY VEHICLE SUPPORTED ONLY BY A JACK. SEVERE INJURY MAY RESULT.**

**WARNING! The following step may require the use of a torch and/ or saw. Proper safety equipment should be used. Failure to use proper safety equipment may result in severe injury.**

**3.** Starting at the rear of the vehicle, Remove the clamp on the Diesel Particulate Filter to tailpipe assembly. **TAKE CAUTION TO NOT CUT OR DAMAGE DIESEL PARTICULATE FILTER TUBING DURING THE REMOVAL PROCESS.** Separate the tailpipe to Diesel Particulate Filter connection. Heating the joints with an oxy-acetylene torch may allow crimped pipes to separate.

*NOTE: Remove the tailpipe hanger pin from the rubber hanger with a pry bar (Spray lubricant will ease hanger removal) and remove the tailpipe assembly from the vehicle.*

**4.** Locate the supplied front tailpipe and install a 4" exhaust clamp over the inlet of Banks front tailpipe. Install the front tailpipe onto the Diesel Particulate Filter outlet. Loosely snug the 4" clamp. (see **Figure 1**)

**5.** Locate a 4" exhaust clamp and the supplied Banks rear tailpipe. Install the clamp over the rear tailpipe inlet and install onto the Banks front tailpipe. Loosely snug the 4" clamp.

**6.** Be sure that the two pipes are completely engaged. Insert the rear tailpipe hanger pin into the factory rubber hanger. Rotate the tailpipe until the hanger pins are parallel with the frame mounted pin. Slide the 4" clamp and position as shown in **Figure 2**. Loosely snug the 4" clamp.

*Notes: Maintain an adequate air gap clearance of one (1) inch between the exhaust and the shock absorber and between the exhaust and the spare tire.*

Minimum distance between exhaust tip and body is one (1) inch. Adjust each of the pipes to ensure that all of the hanger pins are parallel with the frame mounted pins and that the rubber hangers are all positioned slightly forward (**Figure 4**). The amount of forward angle on the rubber hangers should increase the farther downstream the hanger is positioned. This allows the hangers to be properly positioned once the exhaust system reaches operating temperature.

**7.** **Figure 3** illustrates the proper location of an exhaust clamp on a tubing joint. Torque the nuts on each of the exhaust clamps to 35 ft-lb. *Note: The clamps only need to be tight enough to form a seal and hold the pipes together. Over tightening the clamps may cause the system to leak due to the pipe being crimped.*

**8.** Insert the tailpipe tip over the tailpipe outlet. Adjust the tip past the edge of the body or where aesthetically pleasing. Torque the band clamp to 35 ft-lb.

**9.** Remove the protective covering from the tailpipe .

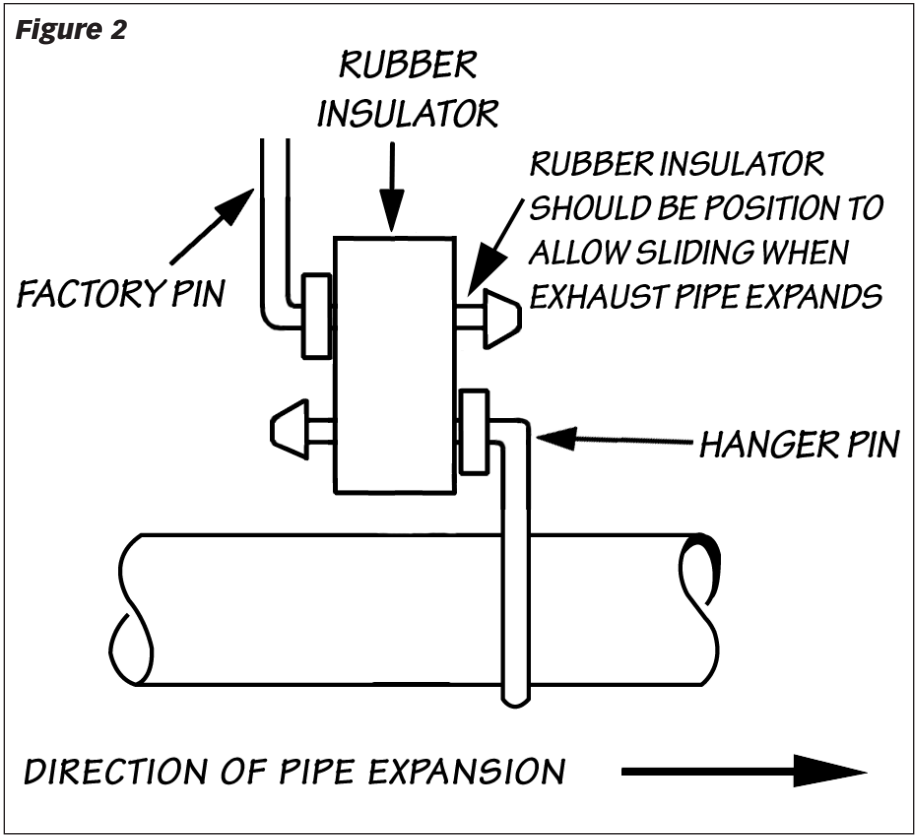


**CAUTION: The protective covering may ignite and burn if not removed prior to running the engine.**

**10.** With everything positioned properly, begin to tighten the clamps starting with the ones closest to the turbo and working your way back. Evenly torque the exhaust clamps to 35 ft-lbs. Make sure that each slip is fully inserted (+/- ¼ inch).

**11.** Your system includes two (2) Banks power logos. The logos can be mounted ½" to 1" above the "Cummins Turbo Diesel" emblem on the driver-side and passenger-side front fenders.

**12.** Re-connect the negative battery cable. Start the engine and listen for exhaust leaks. Tighten the exhaust clamps as necessary. Whenever possible, tack weld slip connections to prevent disengagement is recommended. The Banks Monster Exhaust installation is now complete.

**Figure 3**

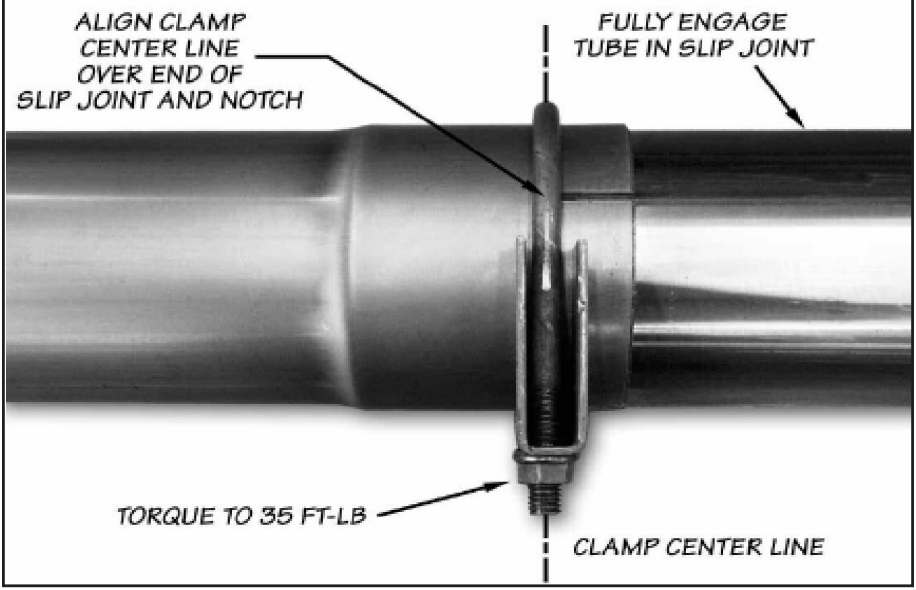


**Figure 4**

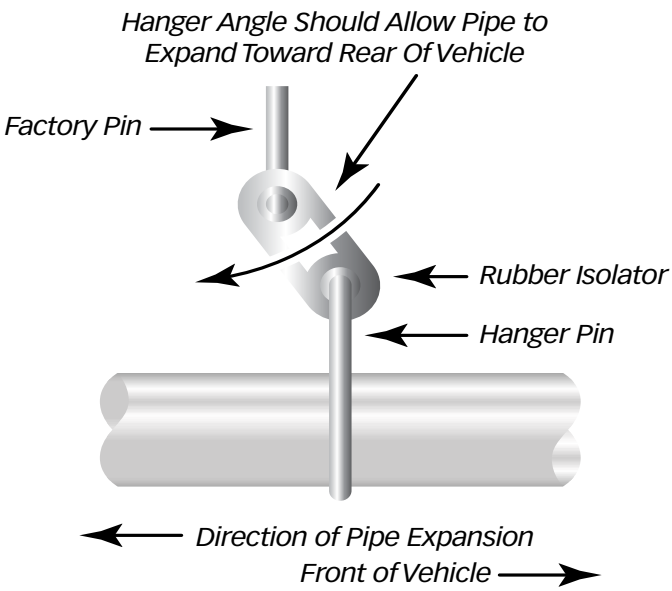

Gale Banks Engineering
546 Duggan Avenue • Azusa, CA 91702
(626) 969-9600 • Fax (626) 334-1743

Product Information & Sales: (888) 635-4565
Customer Support: (888) 839-5600
Installation Support: (888) 839-2700

**bankspower.com**