with Installation Instructions

Owner's Manual

Banks Monster® Sport Exhaust System

2003-2007 Ford Power Stroke 6.0L Turbo-Diesel F250/F350 Trucks

THIS MANUAL IS FOR USE WITH SYSTEMS 48790-48793

Gale Banks Engineering
546 Duggan Avenue • Azusa, CA 91702
(626) 969-9600 • Fax (626) 334-1743

Product Information & Sales: (888) 635-4565
Customer Support: (888) 839-5600
Installation Support: (888) 839-2700

bankspower.com

©2011 Gale Banks Engineering

10/27/11 **PN 96571** v.3.0

Products Available from Banks Power For the 03-07 Ford F-250/350 6.0L

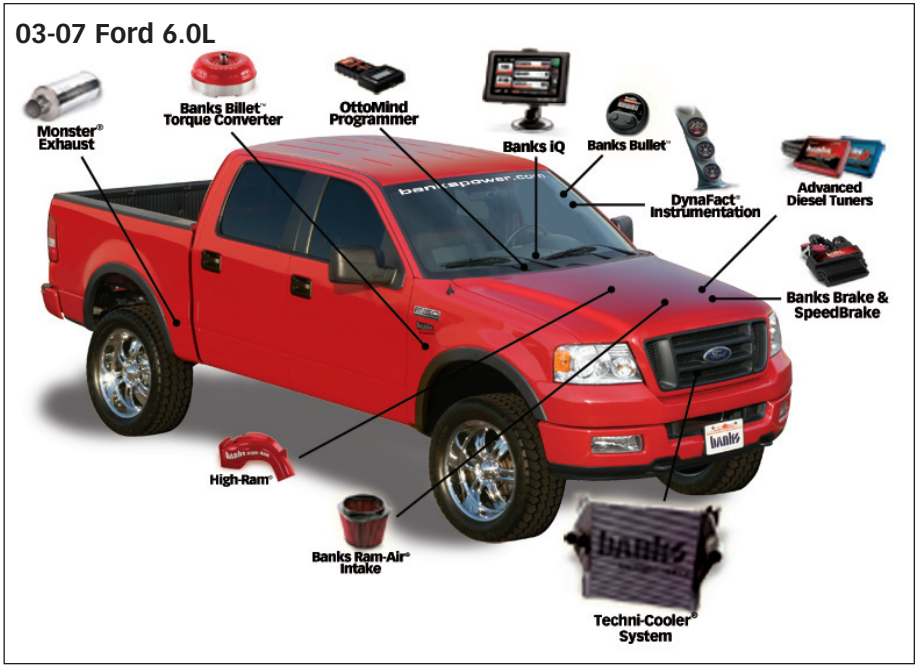

Banks iQ System
(P/N 61151-61152)
- 5" touchscreen interface that can control the Banks Diesel Tuner and/or SpeedBrake on the fly.
- Interchangable gauge display, read and clear codes, monitor engine diagnostics, log data, time your vehicles runs and much more.

Banks Ram-Air Intake System
(P/N 42155)
- Increases your airflow over stock.
- Adds power, improves fuel economy, lowers EGTs and reduces smoke.

High-Ram Intake
(P/N 42750-42751)
- Increases flow and provides more uniform air distribution to the engine for more available power at a given boost level.

Banks Techni-Cooler® System
(P/N 25974-25975)
- Provides increased air flow to the engine by increasing air density for more increased power, lower EGTs and improved fuel economy.

Banks Brake
(P/N 55467-55468)
- Increases the stopping power of your truck and extends the service life of your brakes

Banks Billet Torque Converter
(P/N 72522)
- Higher torque capacity over stock
- Lockup clutch is slip-resistant so transmission fluids stay cooler and transmission life is prolonged.

Banks SpeedBrake
iQ Compatible (P/N 55455-55456)
PDA Compatible (P/N 55457-55458)
- Allows for controlled hill decent at a user defined vehicle speed.

Boost and Pyro Gauges
(P/N 64507)
- Keep your engine safe by monitoring vital engine parameters

Banks Bullet
(P/N 66524-66525)
- Adds power safely to your vehicle
- Displays critical engine functions
- Engine safeguards
- Change power levels on-the-fly

Banks Diesel Tuner
Six-Gun w/ switch (P/N 61023)
Six-Gun w/ iQ (P/N 63749)
EconoMind w/ switch (P/N 63743-63745)
EconoMind w/ iQ (P/N 63747-63748)
- Adds power safely to your vehicle
- Engine and transmission safeguards
- Change power levels on-the-fly

Banks Speed-Loader
(P/N 62988)
- Furthers the power output of the Banks Six-Gun and provides EGT limiting safety.

Thermocouple
- Add a temperature limiting function to your Diesel Tuner

OttoMind Programmer
(P/N 66064)
- Contains Banks tunes that boost your vehicles HP, Torque and MPG.
- Displays a host of critical engine functions
- Provides "service technician" diagnostic capabilities
- Has upgradeable functionality, so it will never be out of date

Banks Stinger Systems
(P/N 46465-46486)
Contains:
- Ram-Air Intake system
- Monster Exhaust (single or dual)
- EconoMind Tuner w/ Banks iQ

Banks PowerPack Systems
(P/N 46497-46519)
Contains:
- Ram-Air Intake system
- Monster Exhaust (single or dual)
- EconoMind Tuner w/ Banks iQ
- High-Ram
- Techni-Cooler System

Banks Six-Gun Bundle
(P/N 46594-46613)
Contains:
- Ram-Air Intake system
- Monster Exhaust (single or dual)
- Six-Gun Tuner w/ Banks iQ

Banks Big Hoss Bundle
(P/N 46623-46643)
Contains:
- Ram-Air Intake system
- Monster Exhaust (single or dual)
- Six-Gun Tuner w/ Banks iQ
- Big Head Wastegate Actuator
- High-Ram
- Techni-Cooler System

For More Information please call (800) 438-7693
or Visit us online @ www.bankspower.com

General Installation Practices

Dear Customer,

If you have any questions concerning the installation of your Banks Power System, please call our Technical Service Hotline at (888) 839-2700 between 7:00 am and 5:00 pm (PT). If you have any questions relating to shipping or billing, please contact our Customer Service Department at (888) 839-5600.

Thank you.

1. Before starting work, familiarize yourself with the installation procedure by reading all of the instructions.

2. The exploded view (**Figure 1**, pages 4-5) provides only general guidance. Refer to each step and section diagram in this manual for proper instruction.

3. Throughout this manual, the left side of the vehicle refers to the driver's side, and the right side to the passenger's side.

4. Disconnect the negative (ground) cable from the battery (or batteries, if there are two) before beginning work.

5. Route and tie wires and hoses a minimum of 6" away from exhaust heat, moving parts and sharp edges. Clearance of 8" or more is recommended where possible.

6. When raising the vehicle, support it on properly weight-rated safety stands, ramps or a commercial hoist. Follow the manufacturer's safety precautions. Take care to balance the vehicle to prevent it from slipping or falling. When using ramps, be sure the front wheels are centered squarely on the topsides. When raising the front of the vehicle, put the transmission in park (automatic) or reverse (manual), set the parking brake, and block the rear wheels. When raising the back of the vehicle, be sure the vehicle is on level ground and the front wheels are blocked securely.

CAUTION! Do not use floor jacks to support the vehicle while working under it. Do not raise the vehicle onto concrete blocks, masonry or any other item not intended specifically for this use.

7. During installation, keep the work area clean. Do not allow anything to be dropped into intake, exhaust, or lubrication system components while performing the installation, as foreign objects will cause immediate engine damage upon start-up.

Tools Required:

- ½" and ⅜" drive ratchets with inch and metric sockets and ½" and ⅜" drive extension
- Inch and metric combination or open-end wrenches
- Standard screwdriver
- Clean shop towels or rags
- Pry-bar
- Reciprocating saw
- Inch-pound and foot-pound torque wrenches
- Penetrating oil or light lubricant spray
- Transmission jack (manual transmission)

General Assembly Diagram

Figure 1

Item	Description	P/N	Qty
1	Intermediate Pipe, CCLB / CCSB	53529	1
2	Intermediate Pipe, ECLB	53530	1
3	Intermediate Pipe, ECSB	53528	1
4	Extension Pipe, CCLB	53531	1
5	Banks Monster Muffler	53810	1
6	Front, Tailpipe	53524	1
7	Rear, Tailpipe	53533	1
8	3 1/2" Exhaust Clamp	52468	1
9*	4" Exhaust Clamp	52470	1
10	Hanger Clamp, Muffler Front	53453	1
11	Hanger Clamp, Muffler Rear	53454	1
12**	Hanger Pin Assembly	53532	1
13**	Bolt, 8-1.25x30mm	91788	2
14**	Washer, Flat, 5/16"	91202	2

Item	Description	P/N	Qty
15**	Nut, Lock, 8-1.25mm	91803	2
16***	Spacers, 8mm	91019	2
17	Monster Tailpipe Tip (Optional)	52383	1
18	Banks Power decals	96009	2

* CCLB systems receive two (2) clamps
** For CCSB only
*** For ECLB & CCLB only

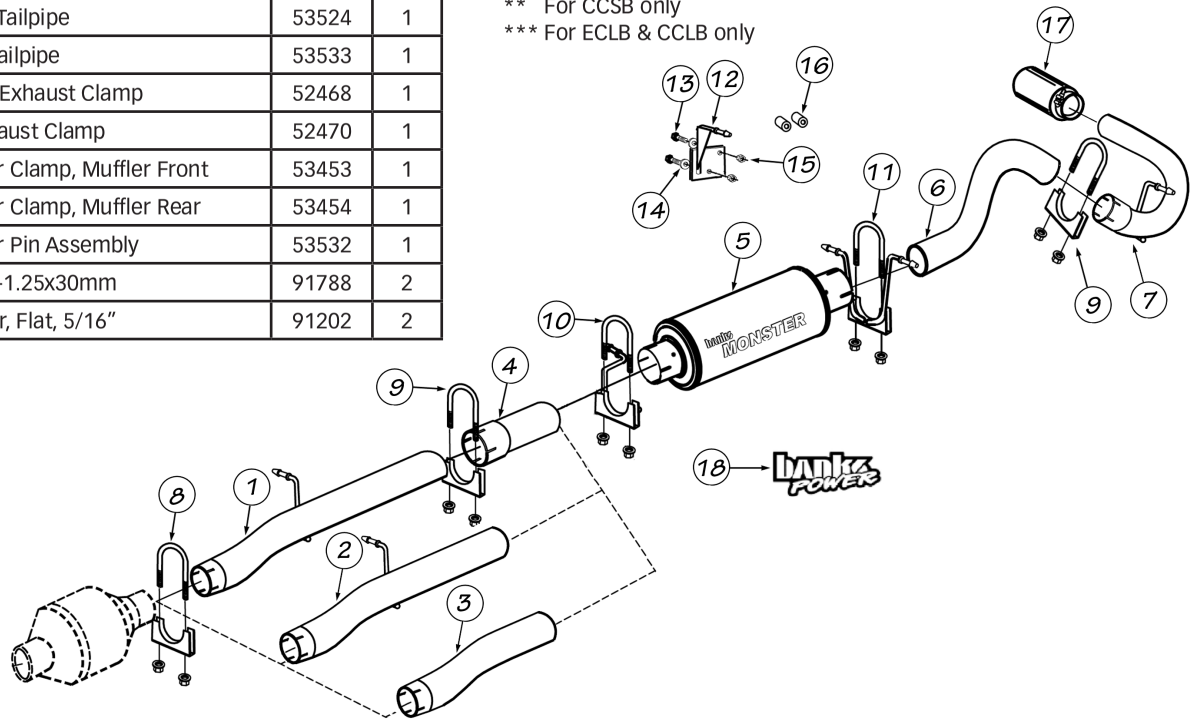

Monster Exhaust System Installation

1. Disconnect the negative (ground) cable from the battery (if there is more than one battery, disconnect both negative cables). Secure the cable so it cannot accidentally come in contact with the post.

2. Raise the vehicle and support it securely with properly weight-rated safety stands, ramps or a commercial hoist. Take care to balance the vehicle to prevent it from slipping or falling. When using ramps, be sure the wheels are centered squarely on the topsides. Place the transmission in park (automatic) or reverse (manual), set the parking brake and securely block the wheels that are on the ground. **CAUTION: Do not work under any vehicle supported only by a jack. Severe injury may result.**

WARNING! The following step may require the use of a torch and/or saw. Proper safety equipment should be used. Failure to use proper safety equipment may result in severe injury.

3. From under the vehicle, remove the factory exhaust system from the catalytic converter back. Starting at the rear of the vehicle, remove each component by either cutting through the pipe near the clamps or by removing the clamps and heating the joints with an Oxy-Acetylene torch to allow crimped pipes to separate. DO NOT CUT OR DAMAGE CATALYTIC CONVERTER TUBING DURING THE REMOVAL PROCESS. Remove the hanger pins from the rubber hangers with a pry bar. (Spray lubricant will ease hanger removal.)

5. Place a supplied 3½" clamp onto the front of the supplied intermediate pipe.

6. Install the supplied intermediate pipe onto the catalytic converter outlet. Be sure the notch and catalytic converter pin are properly aligned. Lightly snug the 3½" clamp onto the front of the intermediate pipe / catalytic converter outlet.

For *crew-cab long-bed* models, install the supplied extension pipe onto the intermediate pipe and snug a supplied 4" clamp onto the connection.

NOTE: Exhaust clamps should be placed at the beginning of the slot and evenly tightened.

7. For *crew-cab long-bed*, *extended-cab short bed*, and *extended-cab long-bed models*, it is necessary to relocate the factory-installed frame-mounted hanger pin that is located behind the rear transmission crossmember.

A) Remove the two (2) factory nuts that mount the front muffler hanger pin to the frame rail and remove the hanger pin from the vehicle.

NOTE: ***Extended cab short bed*** *models will* ***NOT*** *use the two (2) ⅜" spacers.*

B) Re-install the frame mounted hanger pin using the two (2) ⅜" long steel spacers onto the factory exhaust hanger studs. Install the hanger/spacer assembly into the vehicle frame holes about 10-16" to the rear of the original muffler hanger location (see **Figure 2**).

NOTE: Spacers are to be installed between the hanger pin and the inside of the frame rail. Torque factory nuts to 20 ft-lbs.

8. For *crew-cab short-bed models*, it is necessary to replace the factory-installed frame-mounted hanger pin that is located behind the rear transmission crossmember.

A) Using a pry bar, completely remove the rubber hanger from the front muffler hanger pin. Remove the two (2) factory nuts on the front muffler hanger pin from the frame rail and remove the hanger pin from the vehicle. Retain the rubber hanger for re-assembly.

B) Install the supplied hanger pin to the vehicle frame about 10-16" to the rear of the original muffler hanger location (see **Figure 2**). Install the supplied bolts and washers into the hanger plate and through the frame. Install the supplied nuts and torque to 20 ft-lbs (27 N*m).

C) Reinstall the rubber hanger onto the mounted hanger pin assembly.

9. Install the single pin front hanger clamp onto the rear of the intermediate pipe with the hanger pin on the inside facing the muffler. Insert the hanger pin into the vehicle's rubber grommet. Install the inlet of the Banks Monster muffler to the intermediate pipe.

10. install the dual pin rear hanger clamp onto the outlet of the Monster muffler with the hanger pins on the inside, facing the muffler.

Figure 2

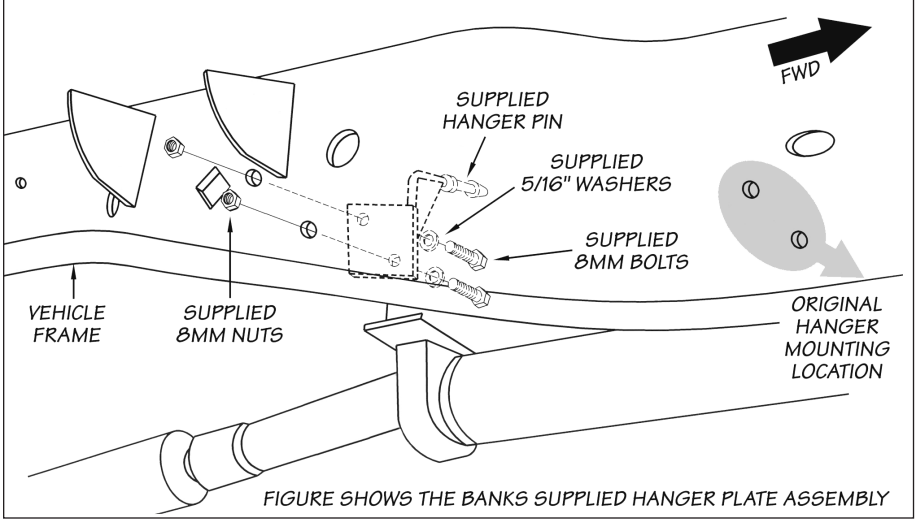

11. Route the Front tailpipe over the rear axle housing and into the muffler outlet. Loosely snug the 4" hanger clamp on the muffler outlet to secure the Front tailpipe. Install a 4" clamp onto the inlet of the rear tailpipe. Install the Rear tailpipe onto the Front tailpipe outlet. Install the Rear tailpipe hanger pin into the corresponding rubber hanger. Loosely snug the 4" hanger clamp over the rear tailpipe inlet to secure the Rear tailpipe to the Front tailpipe.

*NOTE: If installing optional tailpipe tip, cut off 4" from the tailpipe outlet before installing the tailpipe into Banks Monster Muffler. See **Figure 3**.*

If not installing the optional Banks Tailpipe Tip, skip to step 14.

12. Insert the optional tailpipe tip over the tailpipe outlet. Adjust the tip past the edge of the body or where aesthetically pleasing. Torque the band clamp to 35 ft-lb.

13. Remove the protective covering from the tailpipe tip.

CAUTION: The protective covering may ignite and burn if not removed prior to running the engine.

14. With everything positioned properly, begin to tighten the clamps starting with the ones closest to the front and working your way back. Torque the exhaust clamps evenly to 35 ft-lbs (47 N*m). Make sure that each slip is fully inserted (+/- 1/4 inch) and that all mount hangers are in the forward position (see **Figure 4**).

15. Your system includes two "Banks Power" logos designed to complement the Ford badging on your truck. Use the provided measurements (see **Figure 5**) to position the logos for a clean factory look.

16. Re-connect negative battery cable(s). Start the engine and listen for exhaust leaks. Tighten the exhaust clamps as necessary. Whenever possible, tack-welding slip connections to prevent disengagement is recommended. Your Banks Monster Exhaust installation is now complete.

Figure 3

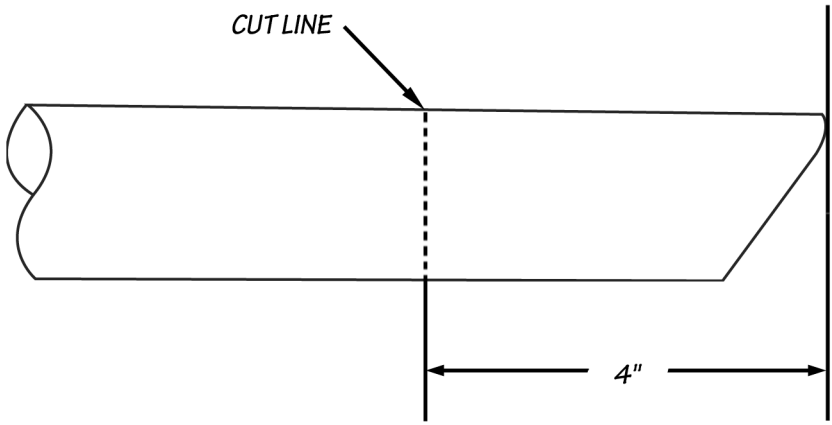

Figure 4

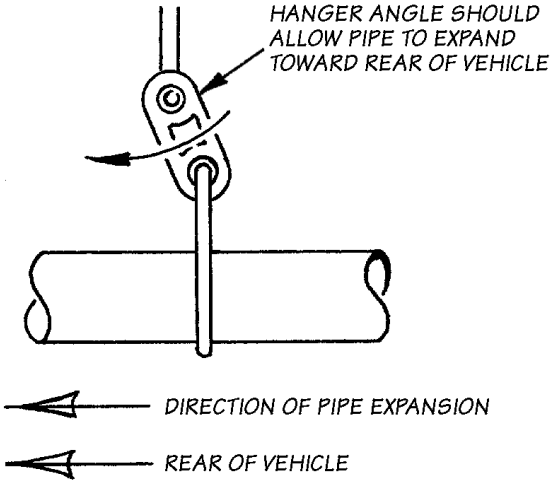

Figure 5

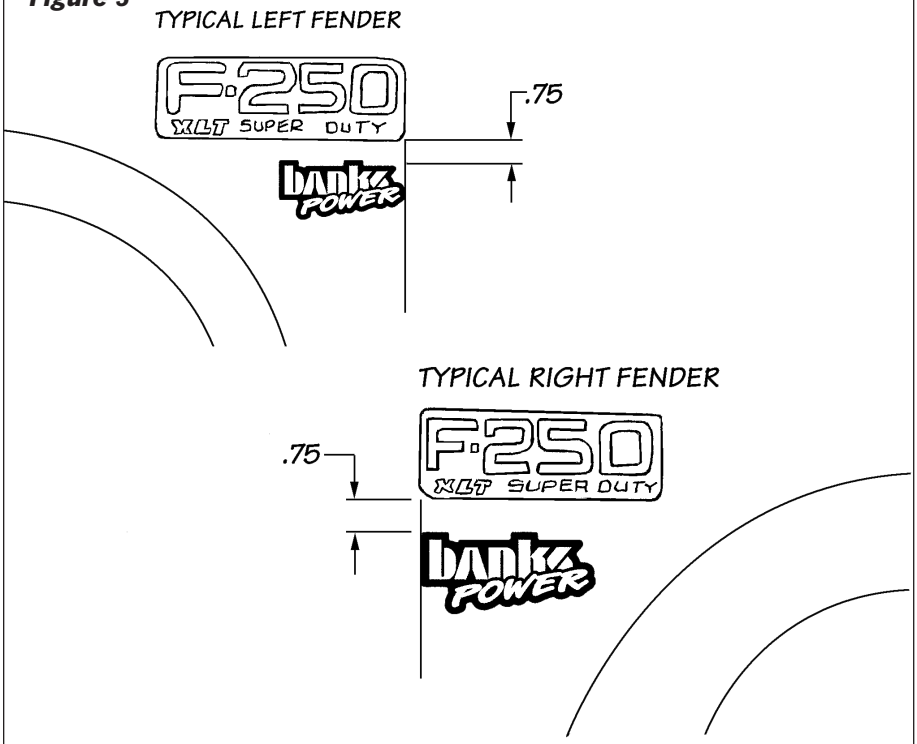

Notes

Notes

Gale Banks Engineering
546 Duggan Avenue • Azusa, CA 91702
(626) 969-9600 • Fax (626) 334-1743

Product Information & Sales: (888) 635-4565
Customer Support: (888) 839-5600
Installation Support: (888) 839-2700

bankspower.com