with Installation Instructions

Owner's Manual

Banks Monster® Exhaust System

2004-2007 Dodge 5.9L HO Cummins (325 HP, 600 FT-lbs) ISB Pickup Trucks Including Mega Cab

THIS MANUAL IS FOR USE WITH

MONSTER EXHAUST, SYSTEMS 48700, 48701, 48708

Gale Banks Engineering
546 Duggan Avenue • Azusa, CA 91702
(626) 969-9600 • Fax (626) 334-1743

Product Information & Sales: (888) 635-4565
Customer Support: (888) 839-5600
Installation Support: (888) 839-2700

bankspower.com

©2016 Gale Banks Engineering

07/22/16 **PN 96424** v.10.0

Products available from Banks Power for the 04-07 Dodge 5.9L HO Cummins

04-07 Dodge 5.9L HO Cummins

Banks iQ System

(P/N 61149)

- 5" touchscreen interface that can control the Banks Diesel Tuner and/ or SpeedBrake on the fly.
- Interchangable gauge display, read and clear codes, monitor engine diagnostics, log data, time your vehicles runs and much more.

Banks Ram-Air Intake System
(P/N 42145)

- Increases your airflow over stock.
- Adds power, improves fuel economy, lowers EGTs and reduces smoke.

Banks Super-Scoop
(P/N 42190 & 42191)

- Adds cooler denser air to the Ram-Air Intake housing, further increasing fuel economy, reducing smoke and lowers EGTs.

Boost and Pyro Gauges
(P/N 64507)

- Keep your engine safe by monitoring vital engine parameters

Big Hoss Intake Manifold System
(P/N 41315 & 42747) *Racing only*

- Increases flow and provides more uniform air distribution to the engine for more available power at a given boost level.

Banks Techni-Cooler System
(P/N 25980 & 25981)

- Provides increased air flow to the engine by increasing air density for more increased power, lower EGTs and improved fuel economy.

Banks Brake
03-04 (P/N 55222, 55223 & 55224)
04-05 (P/N 55225, 55227 & 55229)
06-07 (P/N 55226 & 55228)

- Produces higher, more sustained braking power over other exhaust brakes. The Computerized Brake Control (CBC) delivers smooth reliable performance from your Banks exhaust brake.

Banks SmartLock
03-04(P/N 55270)

- Raises transmission-line pressure to reduces vehicle speed smoothly. Prolongs automatic transmission durability, eliminates excessive clutch slippage and gives cooler Transmission fluid temperatures.

Banks Billet Torque Converter
(P/N 72515)

- Higher torque capacity over stock
- Lockup clutch is slip-resistant so transmission fluids stay cooler and transmission life is prolonged.

Banks AutoMind Programmer
(P/N 66108)

- Higher torque capacity over stock
- Lockup clutch is slip-resistant so transmission fluids stay cooler and transmission life is prolonged.

Thermocouple

- Add a temperature limiting function to your diesel tuner.

Banks Speed-Loader
(P/N 63838)

- Furthers the power output of the Banks Six-Gun and provides EGT limiting safety.

Banks Diesel Tuner
(P/N 63883 EconoMind w/ Switch
P/N 63897 EconoMind w/ iQ
P/N 63887 Six-Gun w/ Switch
P/N 63899 Six-Gun w/ iQ)

- Adds power safely to your vehicle
- Engine and transmission safeguards
- Change power levels on-the-fly

Banks PowerPack Systems
(P/N 47794-47795)
Contains:

- Ram-Air Intake system
- Monster Exhaust (single or duals)
- EconoMind Tuner w/ Banks iQ
- Technis-Cooler System

Banks Stinger System
(P/N 47792-47793)
Contains:

- Ram-Air Intake System
- Monster Exhaust (single or dual)
- EconoMind Tuner w/ Banks iQ

Banks Big Hoss Bundle
(P/N 47798-47799)

- Ram-Air Intake system
- Monster Exhaust (single or dual)
- Six-Gun Tuner w/ Banks iQ
- Techni-Cooler System

Banks Six-Gun Bundle
(P/N 47796-47797)

- Ram-Air Intake system
- Monster Exhaust (single or dual)
- Six-Gun Tuner w/ Banks iQ

For More Information please call 1-800-635-4565
or Visit us online @ www.bankspower.com

General Assembly Diagram

Figure 1

Item	QTY.	Description	P/N
1	1	Muffler Assy	53801
2a	1	Front, Tailpipe	53277
2b	1	Rear, Tailpipe	53280
2a	1	Front, Tailpipe (Mega Cab)	53281
2b	1	Rear, Tailpipe (Mega Cab)	53282
3	1	Tailpipe Tip, 5”	52383
4	1*	Intermediate Pipe (CCLB & Mega Cab)	*
5	1	Intermediate Pipe (SCLB/CCSB)	53570
6	3	Exhaust clamps, 4”	52470
7	1	Front muffler hanger clamp	53284
8	1	Rear muffler hanger clamp	53286
9	2	Urocal, Banks Power	96009
	1	Product Registration Card	96392
	1	Owners Manual	96424
	1	Warranty Statement	96503

* Mega Cab model uses Intermediate pipe 53462 & tailpipe P/N’s 53281 & 53282. (Long pipe)
*Crew Cab Long bed models use Intermediate pipe 53460. (Long pipe)

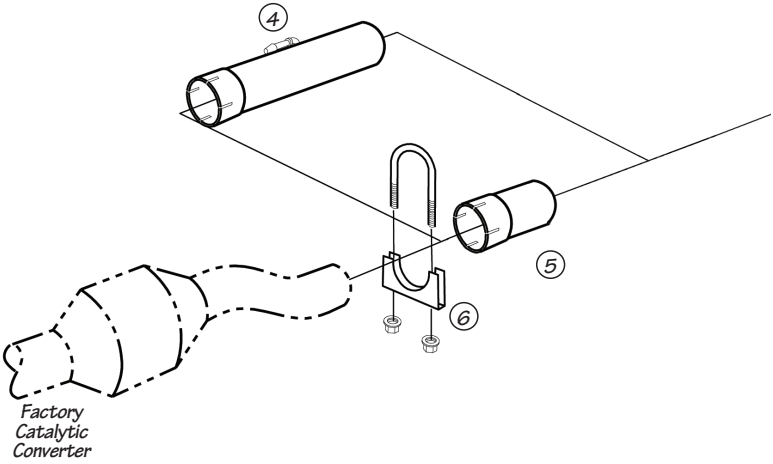

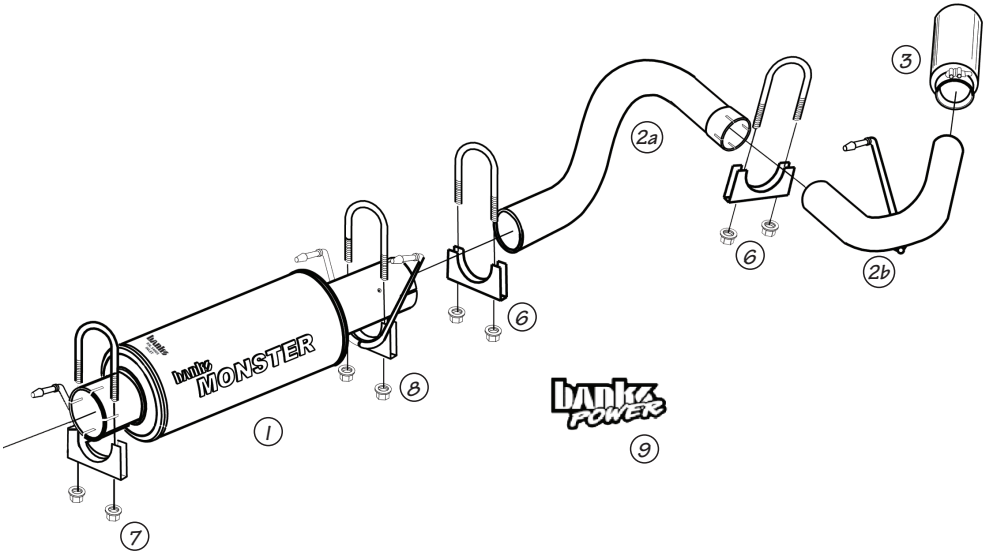
3
2a
6
2b
6
MONSTER
8
1
9
7

General Installation Practices

Dear Customer,

If you have any questions concerning the installation of your Banks Power System, please call our Technical Service Hotline at (888) 839-2700 between 7:00 am and 5:00 pm (PT). If you have any questions relating to shipping or billing, please contact our Customer Service Department at (888) 839-5600.

Thank you.

1. For ease of installation of your Banks system, familiarize yourself with the procedure by reading the entire manual before starting work.

2. The general assembly diagram (**Figure 1**) provides only general guidance. Refer to each step and section diagram in this manual for proper instruction.

3. Throughout this manual, the left side of the vehicle refers to the driver's side, and the right side to the passenger's side.

4. Disconnect the ground cable from the battery (or batteries, if there are two) before beginning work.

5. Route and tie wires and hoses a minimum of 6" away from exhaust heat, moving parts and sharp edges. Clearance of 8" or more is recommended where possible.

6. When raising the vehicle, support it on properly weight-rated safety stands, ramps or a commercial hoist. Follow the manufacturer's safety precautions. Take care to balance the vehicle to prevent it from slipping or falling. When using ramps, be sure the front wheels are centered squarely on the topsides; put the transmission in park; set the hand brake; and place blocks behind the rear wheels.

CAUTION! Do not use floor jacks to support the vehicle while working under it. Do not raise the vehicle onto concrete blocks, masonry or any other item not intended specifically for this use.

7. During installation, keep the work area clean. Do not allow anything to be dropped into intake, exhaust, or lubrication system components while performing the installation, as foreign objects will cause immediate engine damage upon start-up.

Tools Required:

- ½" and ⅜" drive ratchets with inch and metric sockets and ½" and ⅜" drive extension
- Inch and metric combination or open-end wrenches
- Standard screwdriver
- Clean shop towels or rags
- Pry-bar

Highly recommended tools and supplies:

- Inch-pound and foot-pound torque wrenches
- oxy-acetylene torch
- Penetrating oil or light lubricant spray

Monster Exhaust System Installation

1. As a precaution, disconnect the ground of the battery (if there is more than one battery, disconnect both).

2. Raise the vehicle and support it with properly weight rated safety stands, ramps or a commercial hoist. Follow the manufacturer's safety precautions. Take care to balance the vehicle to prevent it from slipping or falling. When using ramps, be sure the front wheels are centered squarely on the topsides; place the transmission in park; set the parking brake and place blocks behind the rear wheels. **CAUTION: DO NOT WORK UNDER ANY VEHICLE SUPPORTED ONLY BY A JACK. SEVERE INJURY MAY RESULT.**

WARNING! The following step may require the use of a torch and/or saw. Proper safety equipment should be used. Failure to use proper safety equipment may result in severe injury.

3. Starting at the rear of the vehicle, remove the tailpipe near the muffler clamps by cutting through the connection or by removing the clamps and heating the joints with an oxy-acetylene torch to allow crimped pipes to separate. Remove the tailpipe from the vehicle.

4. Remove the clamps on the to catalytic converter to front muffler or if applicable, the intermediate pipe connection. **TAKE CAUTION TO NOT CUT OR DAMAGE CATALYTIC CONVERTER TUBING DURING THE REMOVAL PROCESS.** Separate the muffler/ intermediate pipe to catalytic converter connection.

Note: the use of an oxy-acetylene torch may be necessary. Remove the muffler hanger pins from the rubber hangers with a pry bar (Spray lubricant will ease hanger removal) and remove the muffler/intermediate pipe or muffler assembly from the vehicle.

IMPORTANT: If the vehicle is equipped with a catalytic converter, it should be inspected. Diesel catalysts may become plugged with soot and can cause a restriction to exhaust flow, impeding performance. Shine a powerful flashlight into the inlet end of the converter. Observe the light through the other end of the converter. The full circle of the flashlight should be visible without any blockage in the grid work of the catalyst. If excessive soot is observed, the catalyst may need to be cleaned. TAKE PRECAUTIONS to avoid blowing soot toward the work area or where it could be inhaled. ALWAYS use breathing protection. Also inspect the catalyst for damage (i.e. chips, bent corners, etc.) to the grid work. If your catalytic converter is damaged, it may be covered under your vehicle's emissions warranty.

5. Install a 4" exhaust clamp onto the front of the Banks intermediate / extension pipe. Install the intermediate / extension pipe onto the catalytic converter outlet.

For CCLB & Mega Cab: Install the intermediate pipe hanger onto the corresponding rubber hanger.

All Models: Loosely snug the 4" clamp.

6. Install the front muffler hanger pin facing the front of the vehicle. Install the Banks Monster Muffler (note the muffler inlet labeling) onto the intermediate /extension pipe. Install the front hanger pin into the corresponding rubber hanger (see **Figure 2**). With the muffler inlet fully inserted, loosely tighten the 4" exhaust clamp on the muffler inlet swedge.

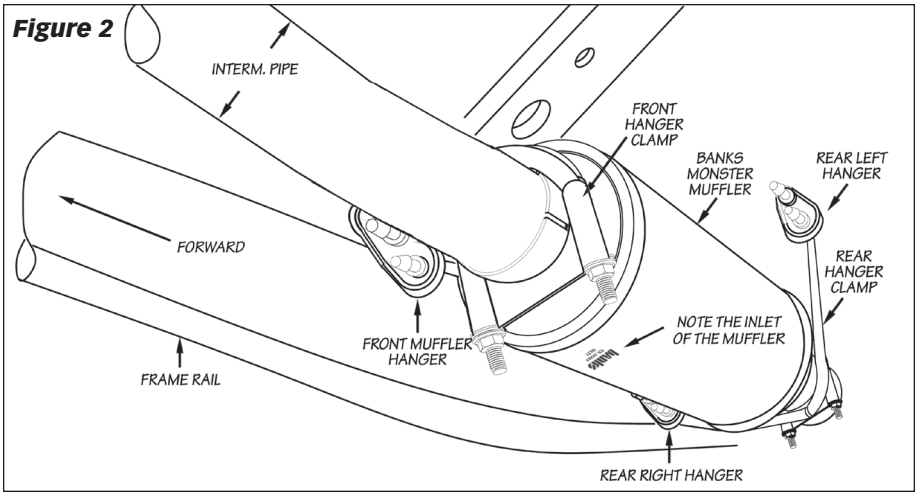

7. Install the rear hanger clamp onto the muffler outlet with the hanger pins facing the muffler. Also install a 4" exhaust clamp on the muffler outlet. Insert the two (2) hanger pins into the rear rubber hangers and adjust the hanger clamp to a position that best supports the muffler. (see **Figure 2**).

8. Route the Front tailpipe over the rear axle housing and into the muffler outlet. Loosely tighten the 4" clamp on the muffler outlet to secure the Front tailpipe. Install a 4" clamp on the the outlet of the Front tailpipe. Install the Rear tailpipe into the Front tailpipe outlet. Install the Rear tailpipe hanger pin into the corresponding rubber hanger. Loosely snug the 4" clamp on the Front tailpipe outlet.

9. Install the 5" Monster tailpipe tip on the exhaust. Keep the wrapping on until installation is complete. The tip should be rotated so the drain hole is facing down. Adjust the tip past the edge of the body or where aesthetically pleasing.

10. With everything positioned properly, begin to tighten the clamps starting with the ones closest to the turbo and working your way back. Evenly torque the exhaust clamps to 35 ft-lbs. Make sure that each slip is fully inserted (+/- ¼ inch).

11. Remove the protective covering from the tailpipe tip.

CAUTION: The protective covering may ignite and burn if not removed prior to running the engine.

12. Your system includes two (2) Banks power logos. The logos can be mounted ½" to 1" above the "Cummins Turbo Diesel" emblem on the driver-side and passenger-side front fenders.

13. Re-connect battery terminals if previously removed. Banks Monster Exhaust installation is now complete.

Gale Banks Engineering
546 Duggan Avenue • Azusa, CA 91702
(626) 969-9600 • Fax (626) 334-1743

Product Information & Sales: (888) 635-4565
Customer Support: (888) 839-5600
Installation Support: (888) 839-2700

bankspower.com