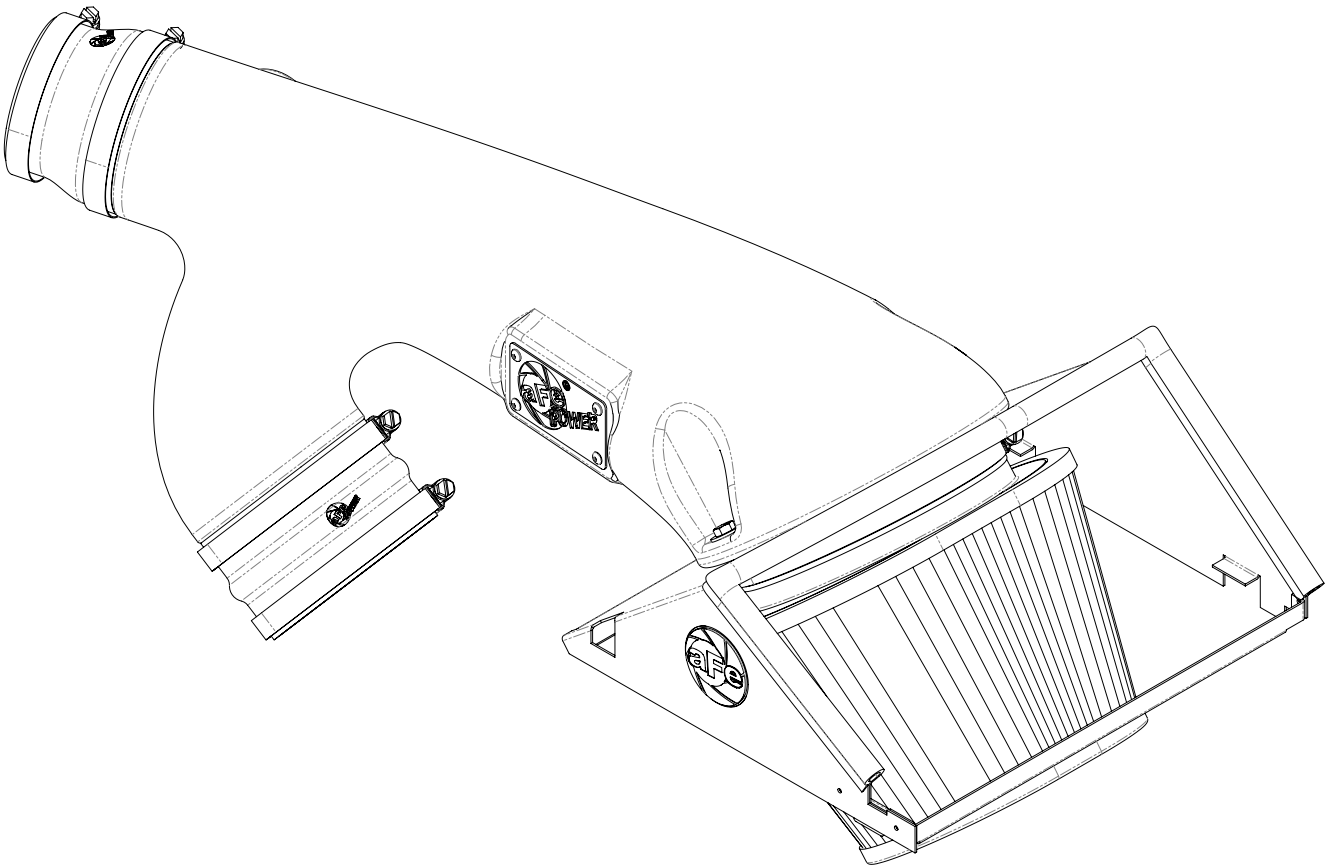

advanced FLOW engineering Stage-2 Air Intake

Instruction Manual P/N: 51-32972-B / 54-32972-B / 75-32972-B

Make: **Ford** Model: **F-150** Year: **2017-2018** Engine: **V6-3.5L (tt) EcoBoost**
Make: **Ford** Model: **F-150 Raptor** Year: **2017-2018** Engine: **V6-3.5L (tt) EcoBoost**

- Please read the entire instruction manual before proceeding.
- Ensure all components listed are present.
- If you are missing any of the components, call customer support at 951-493-7100.
- Ensure you have all necessary tools before proceeding.
- Do not attempt to work on your vehicle when the engine is hot.
- Disconnect the negative battery terminal before proceeding.
- Retain factory parts for future use.

Label	Qty.	Description	Part Number
A1	1	Air Filter (Pro DRY S)	21-91040
A2	1	Air Filter (Pro 5R)	24-91040
A3	1	Air Filter (Pro-GUARD 7)	72-91040
B	1	Seal, Trim (23" inches)	05-00072
C	1	Fitting, Air Temp Sensor	05-01454
D	1	Tube	05-32972B1
E	1	Housing	05-32642B2
F	1	Coupling, Silicone Reducer	05-01331
G	1	Coupling, Silicone Hump	05-01332
H	2	Clamp, 2-1/2" - 4-1/2"	03-50006
I	1	Clamp, 2-13/16" - 3-3/4"	03-50008
J	1	Clamp, 2-5/16" - 3-1/4"	03-50019
K	1	Grommet	03-50167
L	2	Screw: M6	03-50114
M	2	Washer, Flat: M6	03-50070
N	2	Lock Washer: M6	03-50071
O	1	Vent Insert	05-01405

Tools required: 7mm nut driver, 8mm nut driver, 10mm socket & driver, & flat blade screw driver.

Note: Legal in California for use on race vehicles only. The use of this device on vehicles used on public streets or highways is strictly prohibited in California and others states that have adopted California emission regulations.

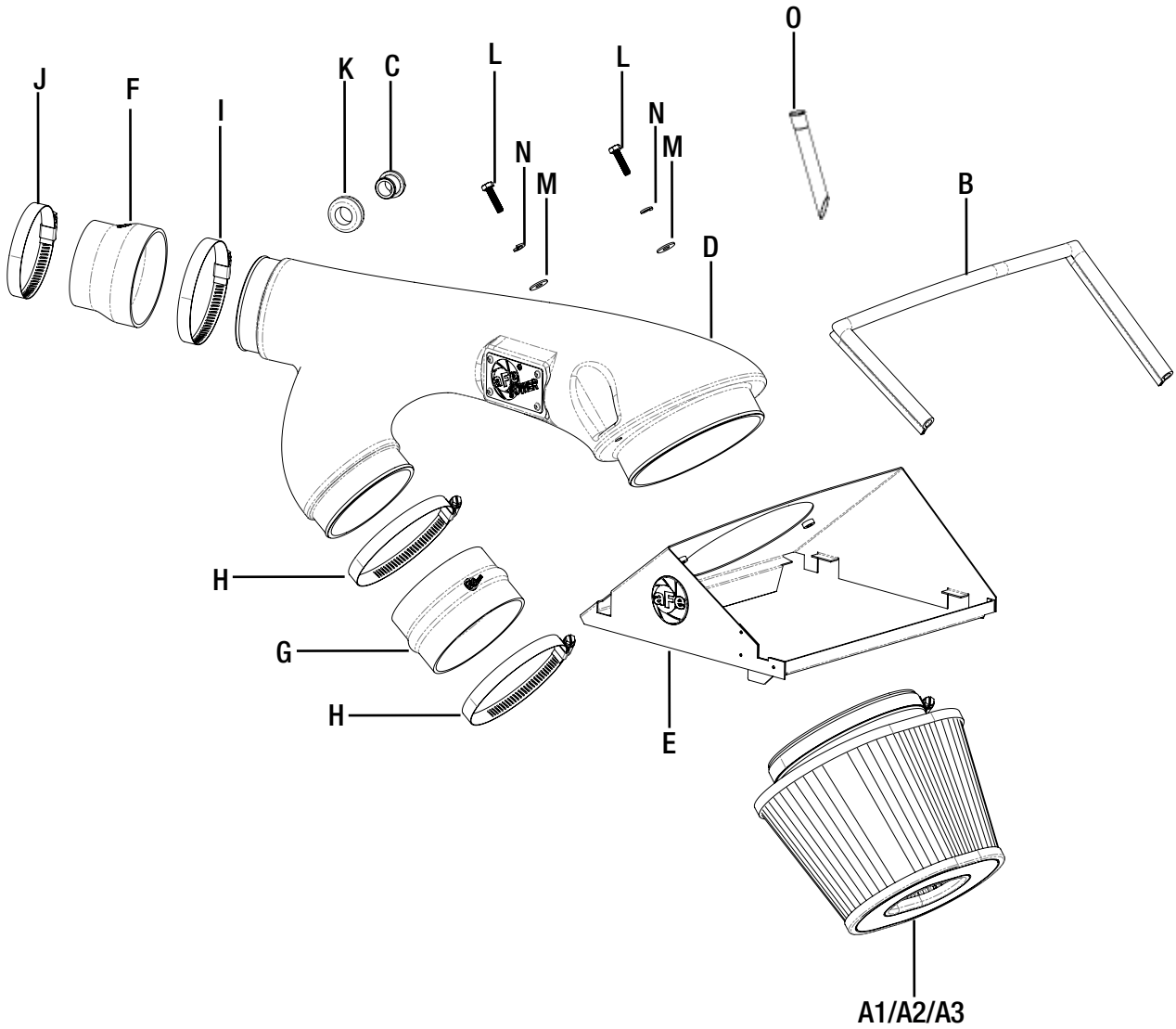
O
J
F
I
K
C
L
L
N
M
N
M
B
D
H
G
H
E
A1/A2/A3

Refer to Figure A for Steps 1-3

Step1: Rotate (1) temperature sensor counter clockwise 1/4 quarter turn then pull it out of the tube.

Step 2: Untighten the three (2) clamps on the air intake tube. Pull the tube out of the truck.

Step 3: Unclip the top of airbox and remove the top half of the box and the air filter from the truck.

Figure B

Refer to Figure E for Steps 4-5

Step 4: Install the grommet into hole on the back side of the in aFe tube then push the plastic fitting in it. (3)

Step 5: Install couplings and clamps onto tube ends. Do not tighten any of the clamps yet.
Secure the intake tube to the housing using the provided bolts, lock washers, and flat washers.

Figure C

Refer to Figure C for Steps 6-7

Step 6: Install the air filter onto the tube, align the flat edge with the top of the airbox, and tighten the clamp.

Step 7: Install trim seal onto housing.

Figure D

Refer to Figure D for Steps 8-9

Step 8: Install the complete assembly into the truck by first lining up the tabs on the airbox and then lining up the couplings.

Step 9: Clip the airbox into place. (4)

Refer to Figure E for Steps 10-11

Step 10: Secure the temperature sensor into the plastic fitting by turning clockwise 1/4 turn.

Important: Make sure the plastic tab clips over the ramp on the top of the fitting.

Step 11: Make sure all clamps and screws are tight.

Figure F

Refer to Figure F for Step 12

(These procedures should be done with the inlet tubes installed on the engine. It is shown off the vehicle for better illustration.)

Step 12: Locate the o.e. plastic tube feeding the driver's side turbo inlet.

Figure G

Refer to Figure G for Step 13

Step 13: Locate the valve cover vent tube that feeds into driver's side turbo inlet. It is not necessary to remove the engine cover.

Figure H

Refer to Figure H for Step 14

Step 14: Note the release clip on the vent tube connectors. Apply pressure against the exposed tail and pull vent fitting off of the turbo inlet tube. It is not necessary to disconnect at the valve cover end. There is a sensor and wire harness on this vent tube. Do not damage or remove these components.

Figure I

Refer to Figure I for Step 15

Step 15: Insert vent fitting with slash cut facing turbo inlet. It should not be a loose fit. It is direction dependent and must not rotate once installed.

Figure J

Refer to Figure J for Steps 16-17

Step 16: Reconnect the vent fitting. It will snap over without having to release the plastic clip. Pull up slightly to confirm installation.

Step 17: Installation is complete. Any codes can be cleared with a code reader or by disconnecting the battery. You will lose any radio presets with battery disconnection. If removal of the vent insert is required, it can be pulled out with internal snap ring pliers.

NOTE: Retighten all connections after approximately 100-200 miles.

Pro DRY S Air Filter

P/N: 21-91040

Pro 5R Air Filter

P/N: 24-91040

Pro-GUARD 7 Air Filter

P/N: 72-91040

SCORCHER GT Module

P/N: 72-91040

Y-Pipe Exhaust

P/N: 48-43010 (Street)
48-34011 (Race)

Cat-Back Exhaust System

P/N: 49-43070-B (Blk. Tips)
49-43070-P (Pol. Tips)

Cat-Back Exhaust System

P/N: 49-43069-B (Blk. Tip)
49-43069-P (Pol. Tip)

Rear Differential Cover

P/N: 46-70152-WL (w/ Oil)
46-70152 (Blk./Mach.)
46-70150 (RAW)

Oil Filter

P/N: 44-LF038

To purchase any of the items above, view airflow charts, dyno graphs, photos, and video; please go to aFepower.com.

Warranty

General Terms:

- aFe warrants their products to be free from manufacturer's defects due to workmanship and material.
- This warranty applies only to the original purchaser of the product and is nontransferable.
- Proof of purchase of the aFe product is required for all warranty claims.
- Warranty is valid provided aFe instructions for installation and/or cleaning were properly followed.
- Proper maintenance with regular inspections of product is required to insure warranty coverage.
- Damage due to improper installation, abuse, unauthorized repair or alteration is not warranted.
- Incidental or consequential damages or cost, including installation and removal of part, incurred due to failure of aFe product is not covered under this warranty.
- All warranty is limited to the repair and/or replacement of the aFe part. To request Return Goods Authorization ("RGA"), email RGA@afepower.com or call (951)493-7100. Upon receipt of the RGA, you must return the product to the address provided in the RGA, freight prepaid and accompanied with a dated proof of purchase and the RGA. Upon receipt of the defective product and upon verification of proof of purchase, aFe will either repair or replace the defective product within a reasonable time, not to exceed thirty days.

Product Category	P/N Prefix	Warranty duration
Direct OE Replacement Filters	10, 11, 30, 31, 71, 73	Life of the vehicle
Racing Filters	18	1 year
Universal	21, 24, 72	2 years
Air Intake Systems	50, 51, 54, 55, 75	2 years
Exhaust Systems	49	2 years
Intercoolers & Intercooler Tubes	46-2	2 years
Intake Manifolds	46-1	2 years
Differential Cover	46-7	Life of the vehicle
Exhaust Manifolds	46	2 years
Throttle Body Spacers	46-3	2 years
Fluid Filters	44	90 days
Pre-Filters	28	2 years
Heavy Duty OE Replacement	70	2 years
PowerSports OE Replacement	81, 87	2 years
PowerSports Intake Systems	85	2 years

No other warranty expressed or implied applies nor is any person or advanced FLOW engineering authorized to assume any other warranty. Some States do not allow the exclusion or limitation of incidental or consequential damages or do not allow limitations on how long an implied warranty lasts, so the above limitations or exclusions may not apply to you. This warranty gives you specific legal rights, and you may also have other rights which vary from State to State.

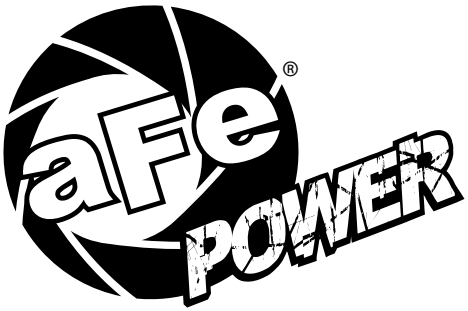

advanced FLOW engineering, inc.
252 Granite Street Corona, CA 92879
TEL: 951.493.7155 • TECH: 951.493.7100
E-Mail:Tech@aFepower.com

P/N: 06-81051