<THESE INSTRUCTIONS MUST BE GIVEN TO THE END USER>

B&W Trailer Hitches
1216 Hawaii Road / PO Box 186
Humboldt, KS 66748
P:620.473.3664
F:620.869.9031

See Limited Lifetime Warranty at
bwtrailerhitches.com/warranty

RAM OEM Mount System Installation Instructions

25,000 LBS. TRAILER WEIGHT
6,250 LBS. TRAILER TONGUE WEIGHT

Call or Email us for Installation Support
hitches@turnoverball.com **www.bwtrailerhitches.com**

Model 3600

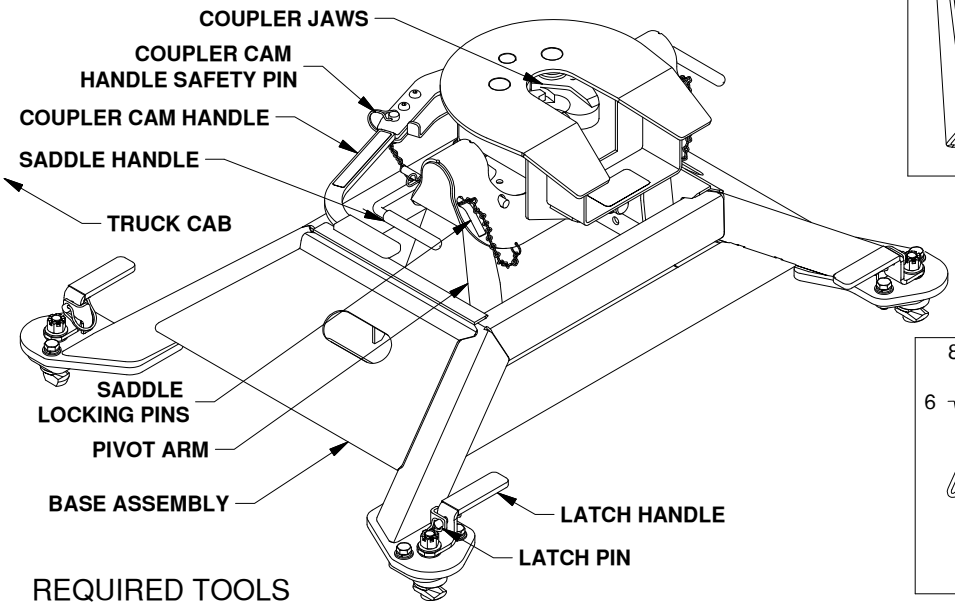

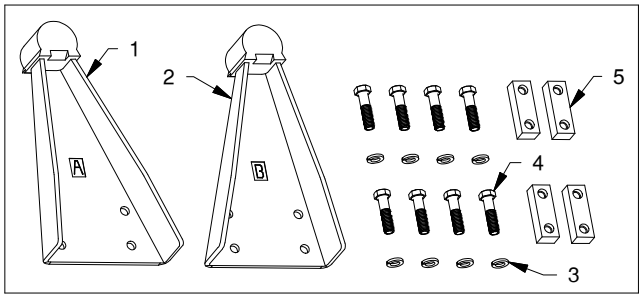

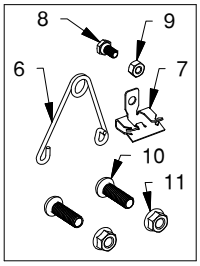

BASE BOLT BAG (RVB3600)		
ITEM	DESCRIPTION	QTY
1	Pivot Arm A	1
2	Pivot Arm B	1
3	½" Split Lock Washers	8
4	½" X 2" Hex Cap Screw	8
5	¾" Threaded Block	4

COUPLER BOLT BAG (RVC3006)		
ITEM	DESCRIPTION	QTY
6	Wire Torsion Spring	1
7	Mounting Clip	1
8	1/4" X 1/2" Cap Screw	1
9	1/4" Finish Nut	1
10	3/8" Button Head Cap Screw	2
11	3/8" Lock Nut	2

REQUIRED TOOLS
Installation of the Companion hitch requires a large torque wrench capable of measuring 80 ft-lbs, a 3/4" socket, a 7/16", and 9/16" socket or wrench, a 7/32" allen wrench and a pair of needle-nose pliers.

⚠WARNING

Failure to comply with the safety information in these instructions could result in serious injury or death.

- Read all installation and operating instructions along with all labels before using this product.
- Adding components to the chassis of any vehicle can be hazardous. There is potential for damage to vehicle, injury from tool usage and many other hazards. This installation must be completed by someone who is aware of the hazards involved. This person must be knowledgeable of proper safety procedures for a vehicle installation of this nature, and for usage of the equipment required to perform the installation.
- Without proper knowledge, towing can be a dangerous activity. Understand all the risks involved with towing before proceeding. For information on towing safety, see **"The Trailer Handbook: A guide to Understanding Trailer and Towing Safety"** from the *National Association of Trailer Manufacturers*, www.NATM.com. and your trailer manufacturer's owner's manual.
- Do not exceed tow or tongue rating of coupler, tow or tongue rating of hitch, or tow or weight ratings of truck or trailer. See vehicle and trailer manufacturer information for ratings. Exceeding these ratings may cause damage to towing components or loss of attachment between the trailer and truck.
- Additional caution must be used when towing a wedge car trailer. Towing stability greatly depends on keeping the center of gravity as low as possible. Load heavy cars over the axles. Never tow with a single car on the front of the trailer. When towing a wedge car trailer, never exceed speeds that are reasonable for the roadway conditions (e.g. turns, going around a curve, etc.). Failure to account for proper trailer center of gravity and speeds that are reasonable for the roadway conditions may cause damage to the truck, trailer, towing components, and loss of attachment between the truck and trailer.
- Do not modify this product in any manner. Doing so could alter its integrity and lead to a loss of attachment between the trailer and the tow vehicle.
- Regularly check that all bolted connections are at the correct torque specification. A visual inspection should be performed before each time you tow.
- Components of the hitch are heavy and cumbersome to handle. Use proper lifting techniques when moving and handling parts.

PREPARING TO INSTALL

- Remove any debris and/or obstructions from the truck bed, this includes any plastic caps which may be over the attachment points. It may also be necessary to remove the plastic grommets from around the mounting points in order to fully seat the base down to the truck.
- Remove all parts from the packaging and familiarize yourself with all the parts and tools required. Use the parts list on the front page to verify that all parts and hardware are present.

INSTALL PIVOT ARMS

1. Mount the pivot arms using one of the twelve different locations illustrated in Table A1. These twelve locations allow flexibility in coupler height (vertical adjustment) and distance from the cab (horizontal adjustment). Choose a location so that your trailer will be as level as possible and have adequate turning clearance while towing. **See warnings below.**

TABLE A1: Pivot arm position table (driver side)

CAB DIRECTION		HORIZANTAL ADJUSTMENT			
		4" BEHIND AXLE (FARTHEST FROM CAB)	2" BEHIND AXLE	OVER AXLE	2" IN FRONT OF AXLE (CLOSEST TO CAB)
VERTICAL ADJUSTMENT	HIGHEST POSITIONS (19")	A	B		
	MEDIUM HEIGHT POSITIONS (18")	A	B		
	LOWEST POSITIONS (17")	A	B		

WARNING: B&W recommends that you check the clearance between the truck cab and the trailer. Compare the measurement taken from the center of the Coupler to the cab, to the measurement taken from the center of the king pin to the farthest forward corner point of the trailer. These measurements will allow you to see how much clearance you will have between the cab and the trailer while towing and turning.

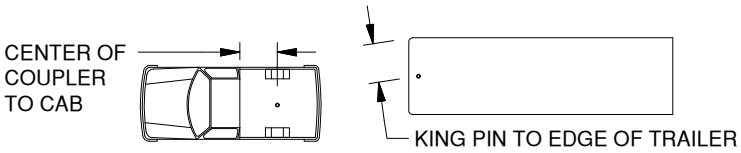

WARNING: B&W also recommends that you check the clearance between the bed side and the underside of the front of the trailer and to allow adequate clearance for the pitch and roll of the trailer while towing.

2. Locate both pivot arms, the four 3/4" threaded blocks, eight 1/2" cap screws, and eight 1/2" split lock washers. Place the lock washers over the cap screws. Align the flat side of the pivot arm flat against the bolt plate and install four 1/2" cap screws through the holes on the arm, holding the arm in place, as shown in Figure A2. Locate the threaded blocks. Note that the sides of the block have threaded holes on one side and smooth bored holes on the other side. When installing the threaded blocks it is critical that the side with the smooth holes is flat against the bolt plate when installed. Pass the threaded block under the bases side and align the block with each set of screws and start each screw, as shown in Figure A3. After all the screws are started through the arms, torque each bolt to 80 ft-lbs.

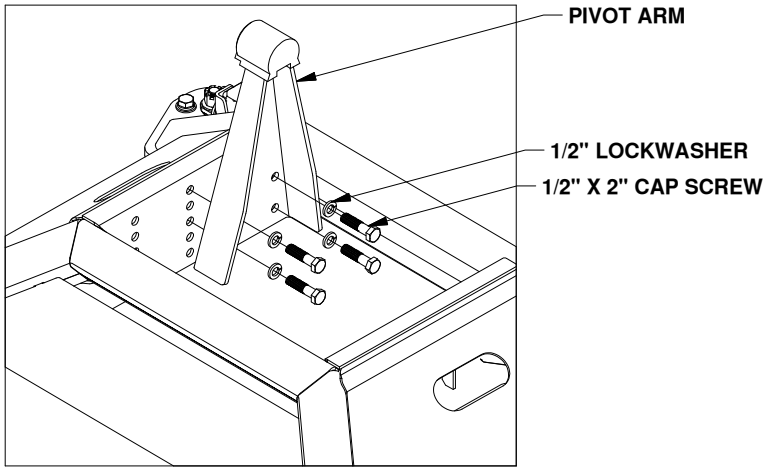

FIGURE A2: Passenger pivot arm mounting location.

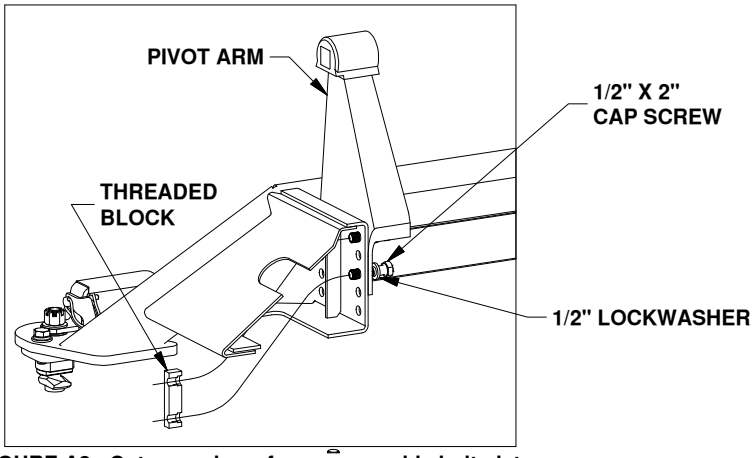

FIGURE A3: Cutaway view of passenger side bolt plate.

WARNING: Installing the thread blocks backwards will not allow the pivot arms to be fully tightened in the base and could lead to hitch failure. Before coupling hitch, be sure that none of the 1/2" x 2" bolts are loose and the pivot arms are securely attached to the bolt plate. Failure to check threaded block orientation could cause serious injury or death.

INSTALL LEVELING KIT

1. Locate the 1/4" cap screw and nut, along with the wire tension spring and mounting clip. Pass the 1/4" cap screw through the mounting clip and the wire spring as shown in Figure B1. Thread the 1/4" lock nut onto the 1/4" cap screw. Tighten the lock nut just enough that the spring will stay in place but will still be able to rotate around the bolt if needed, see Figure B2.

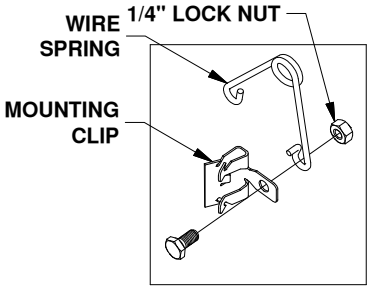

FIGURE B1: Leveling kit parts.

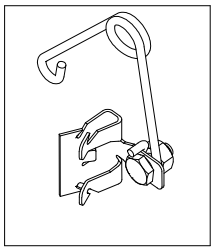

FIGURE B2: Assembled leveling kit.

2. Locate the flange which will be closest to the truck cab on the driver side pivot arm, see Figure B3. The clip should be placed so that when the springs coil is in the line with the edge of the arm there will be 1/2" of clearance between the bottom of the rubber bumper and the top of the spring, see Figure B4. Drive the clip securely onto the flange with a hammer.

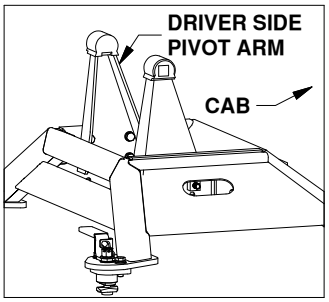

FIGURE B3: Base View

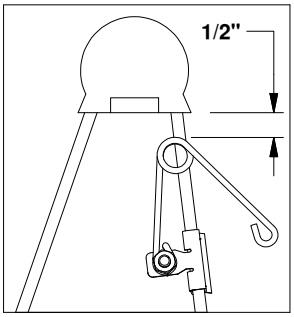

FIGURE B4: Driver side pivot arm.

INSTALL BASE

WARNING: The latch cams and handles must be adjusted to fit the tow vehicle. Failure to properly adjust the cams and handles may result in property damage and/or personal injury.

1. The Companion base will mount to four attachment points in the truck bed. Remove any debris and/or obstructions from the truck bed, this includes any plastic caps which may be over the attachment points. Remove the latch pins from each side of the base and rotate the handles out, see Figure C1. Place the base over the attachment points and carefully lower it until the latch cams pass through the floor and the base rests flat against the top of the attachment points.

IMPORTANT: The attachment points may differ from truck to truck. If the pilots fit into the trucks attachment points you may skip Step 2 and continue with Step 3. If the Companion base does not fit into the attachment points proceed to Step 2.

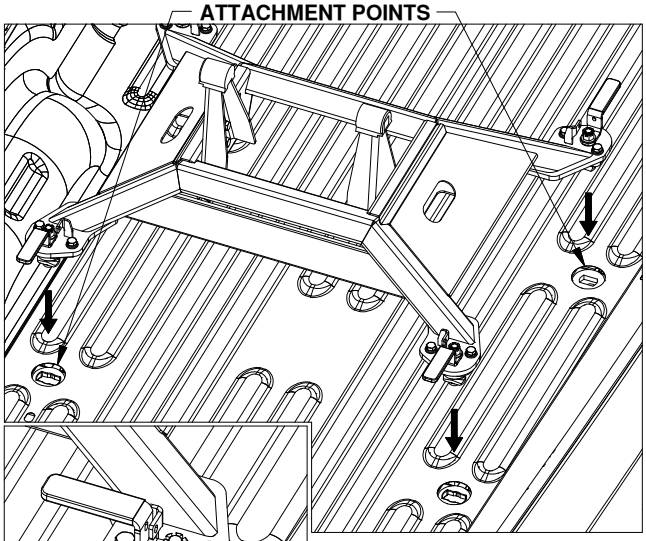

FIGURE C1: View of unlatched base

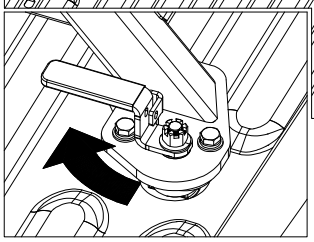

FIGURE C2: View of closed latch handle

2. Each leg of the Companion base has an adjustable pilot assembly which is attached to the foot with two 1/2" cap screws, as shown in Figure C3. To adjust the pilot assemblies that do not fit into the attachment points, loosen both the 1/2" cap screws so the pilot assembly can move freely, see Figure C4. Set the base over the attachment points and adjust the pilot assemblies until the pilot keys pass through the slot in the attachment points and the pilot shoulders rest flat against the top of the attachment points. When all the pilot assemblies are aligned and inside the attachment points, push the base towards the cab and use a tape measure to verify that the base is approximately square with the truck bed. Tighten any loose cap screws to 80 ft-lbs.

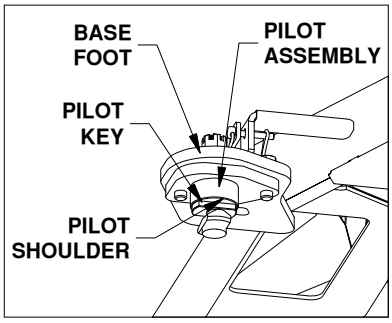

FIGURE C3: View under base foot

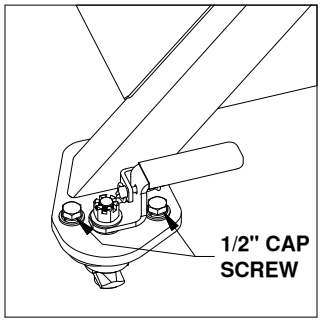

FIGURE C4: View of a base foot.

3. ***Prepare to adjust latch tension.*** Once the base is in place, remove the cotter pins from each of the four castle nuts. Engage the cams with each attachment point by turning the latch handles back to their locked position, see Figure C2. If a handle will not turn easily, loosen the castle nut until the cam will freely turn and engage the attachment point.

4. ***Adjust the tension in the latch handle**, for parts list and visual guide refer to Figures C5 and C6.*

With the handles in the latched position, tighten the castle nut until snug to increase the tension on the latch. Rotate the latch handle open and closed. Tighten the castle nut slightly and rotate the handle open and closed again. Repeat this process until you feel the cam engage the attachment point while closing the handle. The handle is set at the proper tension when there is friction between the cam and attachment point but the handle can still be closed by hand without bumping, tapping, or otherwise forcing the handle closed.

WARNING: Setting latch handle tension so that excessive force is required to close the latch handles may result in property damage and/or personal injury.

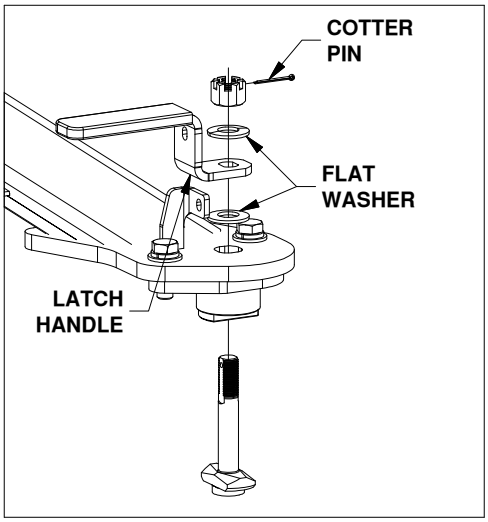

FIGURE C5: List of latch parts.

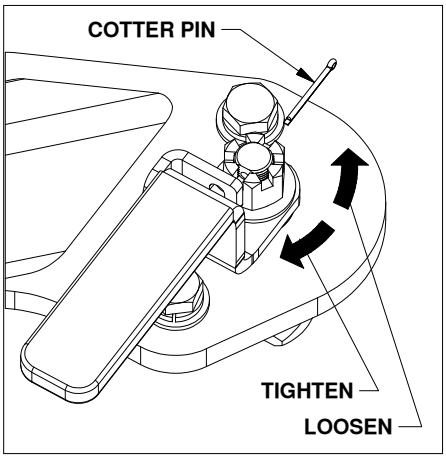

FIGURE C6: View of base leg.

5. With the base firmly held down and each latch handle closed, replace the latch pins removed in Step 1.

NOTICE: Verify latch tension each time the Companion base is placed in a truck, and periodically before towing.

INSTALL COUPLER HANDLE

1. Locate the two 3/8" x 1-1/4" button head cap screws and the two 3/8" flanged lock nuts provided in a bolt bag. Pull out the coupler arm and pin it with the safety locking pin near the base of the arm as shown in Figure D1.

   CAUTION: Pulling the arm out away from the coupler creates a pinch point. Use caution when installing the handle to avoid injury.

2. Using the button cap screws and the lock nuts attach the coupler handle to the arm and tighten, see Figure D1. Pull out the coupler cam handle safety pin.

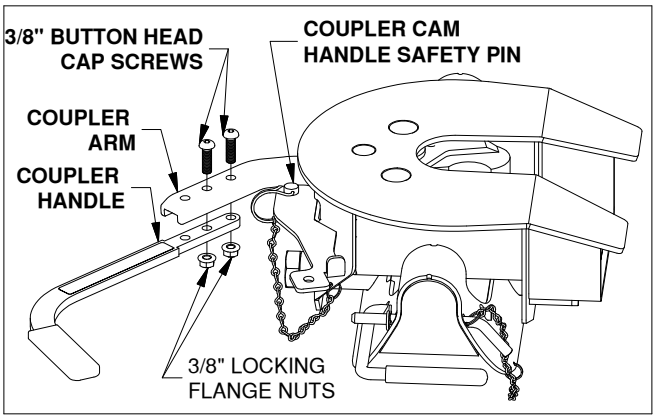

FIGURE D1: View looking down at side of coupler head.

INSTALL COUPLER

1. Lubricate the polyurethane bushings on top of the pivot arms with high grade lithium grease (available at your local hardware/automotive store). Place the coupler over the pivot arms. (The saddle handles should be parallel with the base in the latched position.) Place the saddle lock pins through the saddle, then insert the hairpins through the holes in the end of the saddle lock pins to secure the coupler to the pivot arms, see Figure E1.

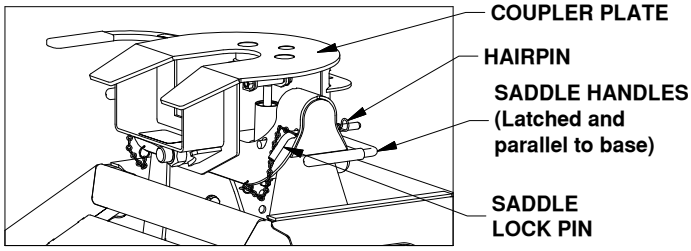

FIGURE E1: Coupler installed on base.

2. Adjust the resting angle of your coupler plate by rotating the spring on the driver side pivot arm. Pulling the top of the spring away from the cab will increase the angle of the coupler plate. Set the angle of the coupler so that head will tilt away from the cab when coupling, see Figure E2. Tighten the 1/4" nut once the spring's orientation is set.

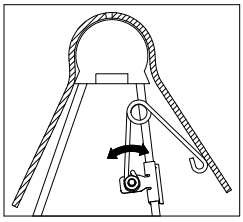

FIGURE E2: Cutaway view of driver side pivot arm and saddle.

ATTACHING TRAILER

Remove the coupler cam handle safety pin and open the cam handle. Adjust the height of the 5th wheel trailer so the king pin plate is slightly lower than the top of the coupler. Back the truck towards the trailer, centering the trailer's king pin in the coupler, until the king pin has engaged the jaws. Ensure that the coupler cam handle has completely closed before inserting the cam handle safety pin through the cam handle and the coupler. Hook up brake and lighting connections before towing.

WARNING: Towing a trailer without a functioning pivot point between the hitch & trailer will cause significant damage to the hitch which may lead to serious injury or death. Some pin boxes such as a Pull-rite® Superglide Capture Plate remove the pivot point between a trailer and coupler and should not be used, See figure F1. Pin boxes with a wedge that relocates the pivot point such as a Reese® Sidewinder or Reese® Revolution may be used, see figure F2.

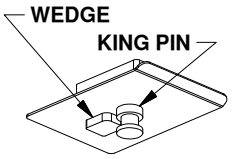

FIGURE F1: Capture plate.

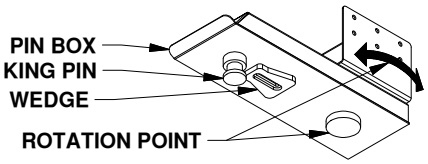

FIGURE F2: pin box with rotation point.

PULL TEST

Have the truck stationary with the emergency brake on, the trailer wheels blocked and landing gear still resting firm on the ground supporting the weight of the trailer. Make sure no one is between the truck and trailer, return to the cab of the truck. Release the emergency brake and apply the trailer brakes. Try to pull the trailer forward with the truck. If the trailer is properly hooked up, the wheel blocks and trailer brakes should not allow the truck to move forward. If trailer is not hitched correctly, the trailer will separate from the truck. However, with the landing gear resting firmly on the ground, it will support the trailer and not allow it to drop or fall on the truck sides.

UNATTACHING TRAILER

Lower landing gear and block the trailer wheels. Raise the trailer until the tongue weight is removed from the truck. Then, unpin the Coupler handle and rotate to the open position to unlatch the jaws. If the jaws do not open, readjusting the landing gear may relieve pressure and allow them to open. Use the safety pin to lock the handle in the open position and when you are sure that the landing gear will support the trailer, move the truck forward to release the jaws from the kingpin. The jaws will always open when the pressure of the trailer is taken off the coupler as the truck pulls away.

UNINSTALL HITCH

To uninstall the Companion hitch, remove the Saddle lock pins, grab the saddle handles and lift to remove the coupler from the pivot arms. To remove the Companion base, remove the latch pins from each base leg and turn the handles. Carefully lift and position the base out of the attachment points.

NOTICE: Base latch handle tension and all bolted connections should be checked regularly. The latches must have the proper resistance when rotating, and bolts must have proper torque. Always perform a visual inspection before towing.

HELPFUL TIPS:

- Approximately 15%-25% of the trailer weight should be on the hitch.
- The height of the king pin box and pivot arms should be adjusted so that the trailer is approximately level for towing.
- Allow adequate clearance between the bed side and the underside of the front of the trailer for pitch and roll of the trailer.
- Lubricate top surface of coupler with automotive type chassis grease or use a nylon lube plate to provide a lubricated surface.
- Grease jaws with automotive type chassis grease.
- Grease the saddle through the grease zerk approximately every six months with multi-purpose grease. This allows the coupler to pivot freely, see Figure G1.

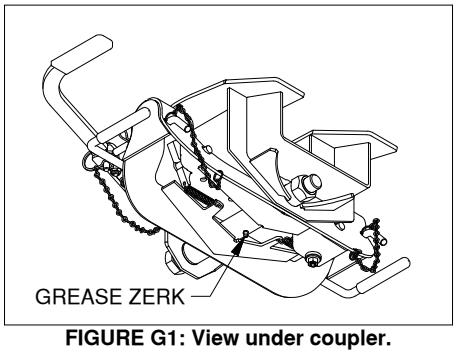

FIGURE G1: View under coupler.

Copyright 2018, B&W Custom Truck Beds, Inc. ALL RIGHTS RESERVED