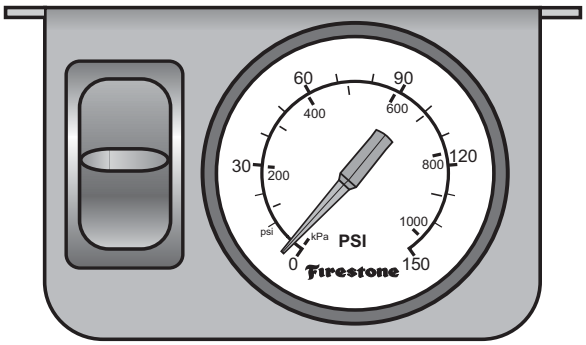

INSTALLATION INSTRUCTIONS

Congratulations on your purchase of a new Level Command II kit. This kit was designed to provide inflation control of your air helper springs. This kit will be an asset to your vehicle, meeting nearly all of your air supply needs.

Please take a few minutes to read through the instructions, identify the components, and learn how to properly install your Level Command II kit.

NOTE:

The Level Command II kit can be used with all air helper spring products. If you are installing an air suspension system, do not install the air line tubing to the air springs as stated in the suspension system instruction manual. If you are adding the Level Command II kit to an existing air suspension system, you will need to deflate the air springs and remove the air line tubing.

NOTE ON CONNECTING THE AIR LINE TUBING:

Cut the air line tubing as squarely as possible. To connect the air line tubing to the fittings, push the tubing into the fittings as far as possible. If for any reason the tubing must be removed, first release the air pressure from the air helper spring. Push the collar toward the body of the fitting and the pull out the tubing. To reassemble, make sure the tubing is cut squarely and push the tubing back into the fitting.

TOOLS REQUIRED:

- 3/16" DRILL BIT
- 1/4" DRILL BIT
- WIRE CRIMPER/STRIPPER
- PHILLIPS SCREW DRIVER
- (2) 7/16" WRENCHES
- 3/8" DRILL BIT
- POWER DRILL
- PLIERS
- UTILITY KNIFE
- CENTER PUNCH

PARTS LIST

SINGLE AIR CONTROL PANEL		1
COMPRESSOR	9284	1
RELAY HARNESS	9307	1
30 FT. AIR LINE TUBING		1
1/8" NPT PUSH-TO-CONNECT STRAIGHT FITTING	3055	1
PUSH-TO-CONNECT T-FITTING	3025	1
10 -32 x 1" MACHINE SCREW		6
10 -32 LOCK NUT		6
#10 FLAT WASHER		8
RING TERMINAL		1
WIRE CONNECTOR		2
NYLON TIE		15

Air Line & Wiring Diagram

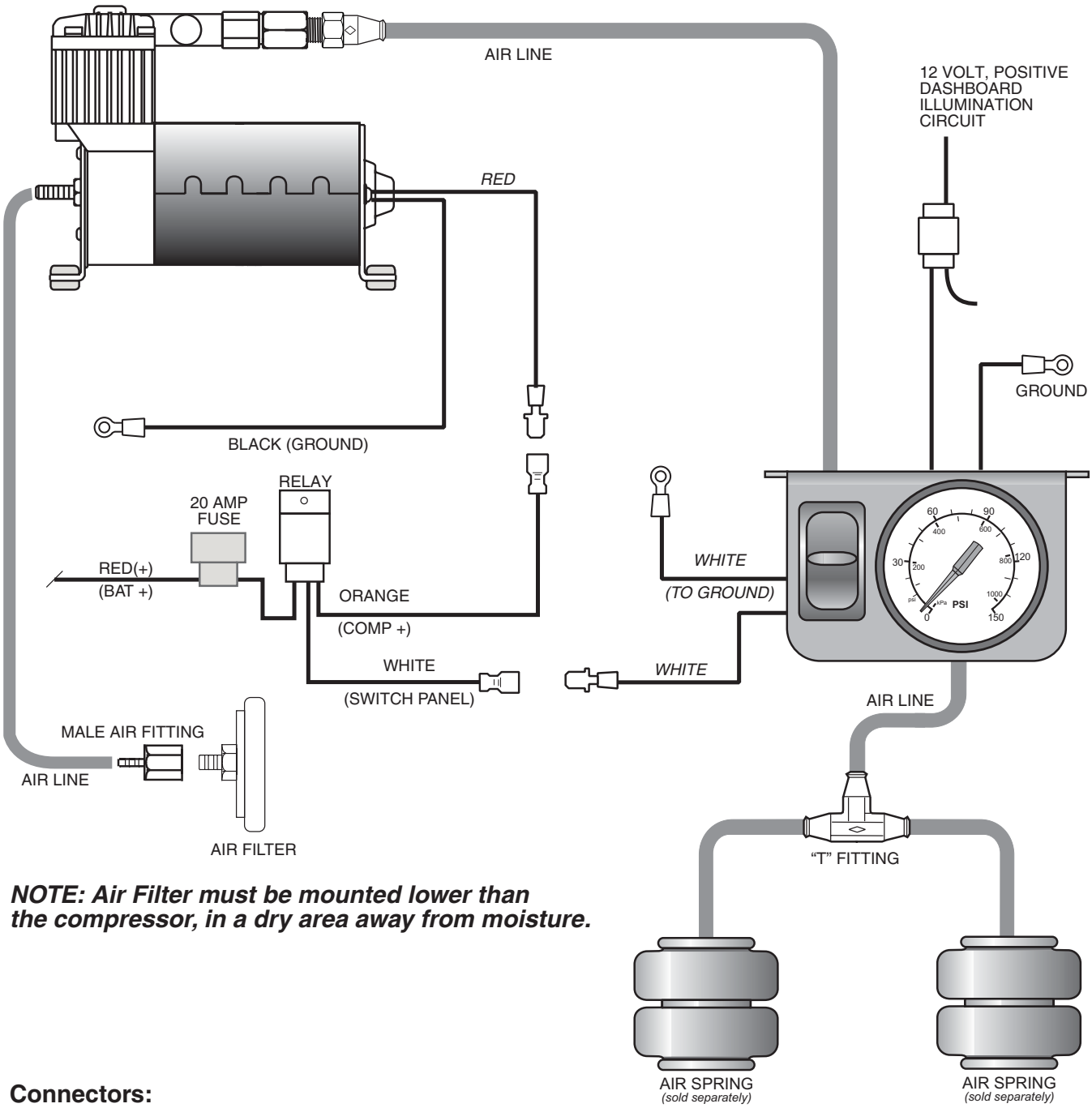

NOTE: Air Filter must be mounted lower than the compressor, in a dry area away from moisture.

AIR SPRING
(sold separately)

AIR SPRING
(sold separately)

Connectors:

Male spade connector

Female spade connector

Ring Terminal

Wire connector

Figure "A"

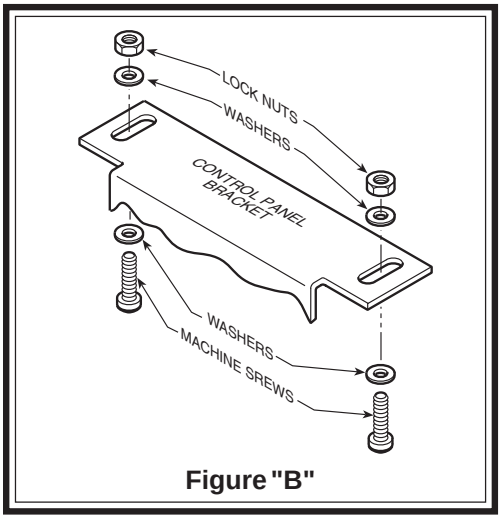

Figure "B"

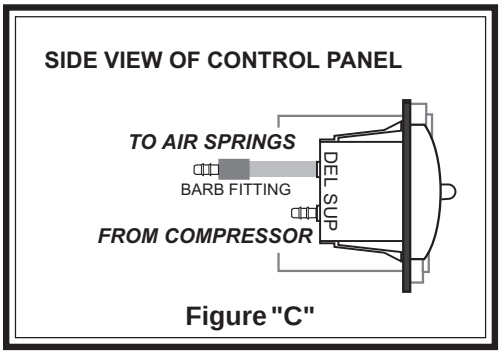

Figure "C"

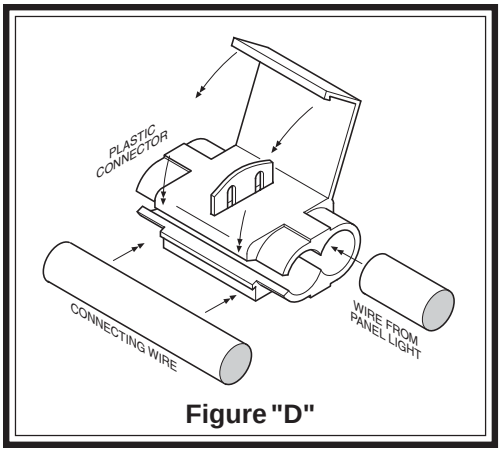

Figure "D"

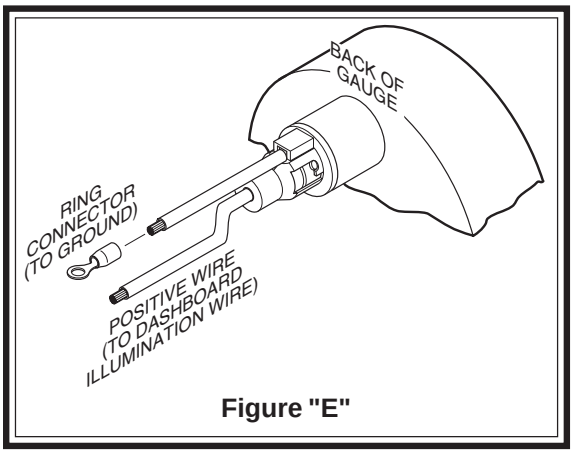

Figure "E"

STEP 1 - SELECT A MOUNTING LOCATION FOR THE CONTROL PANEL

Select a mounting surface under the dashboard or other protected location. Using the control panel as a template, mark each of the mounting points with a center punch. Drill a 3/16" diameter hole on each center mark ***see Figure "B"***. *Do not attach the control panel at this time.*

STEP 2 - PREPARE THE COMPRESSOR

Install the 1/8" NPT straight fitting into the head of the air compressor ***see Figure "A"*** (Torque to 30 -in. lb).

STEP 3 - MOUNT THE COMPRESSOR

Begin by removing the negative battery cable. Select a convenient location to mount the compressor. This location should provide ample air flow and be protected from airborne debris and moisture. Mark and drill four 3/16" holes using the compressor as a template for the hole location. Any burrs in the holes should be removed to prevent damage to the rubber isolators. Mount the compressor using the supplied 10-32 x 1" machine screws, 10-32 lock nuts, and 3/16" washers, ***see Figure "A"***. Over tightening will crush the brass insert and the rubber isolator, reducing vibration isolation. Before drilling, ensure that there are no electrical, fuel, or brake lines on the opposite side of the mounting surface that can be damaged by the drill. Attach the ring connector on the compressor to a suitable ground source on the vehicle ***see Figure "A"***.

STEP 4 - ROUTE THE AIR LINE

Before installing the air line tubing, ensure that there is no pressure in the air springs. To release the air pressure, remove the valve core from the inflation valves or release the pressure by using a tire gauge to depress the valve stem.

A) COMPRESSOR TO CONTROL PANEL

Cut a piece of air line tubing that will reach from the control panel to the compressor. Cut the air line tubing as squarely as possible and install the tubing on to the barbed fitting on the back of the switch marked *SUP* (supply) ***see Figures "A" & "C"***. Before attaching the air line tubing to the control panel, soak the end (1") of the air line in warm water for a few minutes to soften the tubing. Do not use pliers to work the tubing on to the barbed fitting, as the tubing may be damaged. It may be necessary to drill a hole in the firewall to route the tubing. *Do not fold or kink the tubing.* Ensure that the tubing is protected from sharp edges when passing through the firewall.

B) CONTROL PANEL TO AIR SPRINGS

Cut a length of air line tubing that will reach from the control panel to the rear of the vehicle. Slide the tubing as far as possible onto the barbed fitting marked *DEL* (delivery) on the back of the paddle switch ***see Figures "A" & "C"***. Before attaching the air line tubing to the barbed fitting on the gauge panel, soak the end of the tube (1") in hot water for a few minutes to soften the tubing. Do not use pliers to work the tubing on to the barbed fitting, as the tubing may be damaged. Install a T-fitting on the opposite end of the tubing at the rear of the vehicle. Route a length of air line tubing from the T-fitting to each air spring. Use the suppled nylon ties to secure the tubing to the vehicle. Make sure that the tubing is protected from sharp edges when passing through the firewall.

Step 6 - Attach the control panel to the dashboard

Place the air control panel on the dash where the holes were drilled in ***Step 1***. Using the provided machine screws and nuts, attach the air control panel to the dashboard or other selected mounting surface ***see Figure "B"***.

Step 7 - Route the electrical wire

Install the relay within three feet of the compressor. Nylon ties can be used to secure any excess wire and the relay neatly into place. Route the white wire labeled “Switch Panel” to the control panel. Connect the white wire to one of the white wires on the back of the switch. The remaining white wire will be grounded to the vehicle. Next, connect the orange wire labeled “Comp +” to the red (positive) wire on the compressor. Connect the red, fused wire labeled "Bat +" from the relay to the battery or another 12V (positive) source capable of supporting 20 amps. ***See Figure "A"***.

Step 8 - Wire the control panel for illumination

There are two wires (one red and one black) attached to the gauge on the back of the control panel. Connect the red wire to a fused dashboard illumination wire. Connect the black wire to a suitable ground source ***see Figure "E"***.

Attach the end of the positive wire to a dashboard illumination wire using a wire connector. Slip the wire connector over the existing dashboard illumination wire and insert the un-stripped gauge panel wire into the wire connector. Close the wire connector on to the wires with pliers ***see Figure "D"***. Attach the black wire to a ground source by crimping a ring connector on to the wire and securing it to a suitable ground source on the vehicle. *Note:* Should additional wire be necessary to reach the dashboard illumination wire and ground source, use 18 gage multi-strand wire.

Step 9 - Check the system

With the Level Command II kit and your air helper springs installed, you are ready to test the system. Reattach the negative battery cable. Turn on the vehicle's ignition. Push the paddle switch up to inflate the air springs. The gauge will display how much air pressure is in the air springs. Inflate the air helper springs to 70 psi and check the fittings for air leaks with an applied solution of soap and water. If a leak is detected at a tubing connection, check to make sure that the tube is cut as square as possible and that it is pushed completely into the fitting. The tubing can easily be removed from the fitting. First, release the pressure from the air spring. Push the collar towards the body of the fitting and pull out the tube.

System operation

The Level Command II kit allows the air springs to be inflated from the inside of the vehicle. Push the paddle switch up to inflate the air springs and push the paddle switch down to deflate the air springs.

RIDE-RITE™
SPORT-RITE™ COIL-RITE™
AIR HELPER SPRINGS