CHEVY/GMC

20K OE Series Industry Standard Adapter

#4444

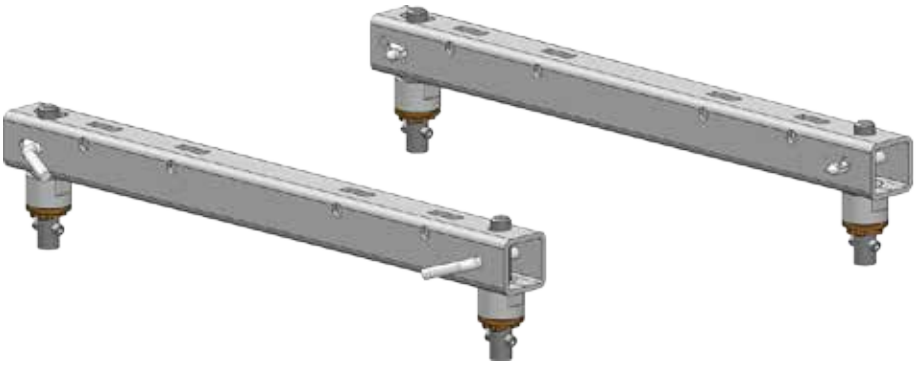

Gross Trailer Weight (Maximum).....20,000 lbs.

Vertical Load Weight (Max. Pin Weight).....4,500 lbs.

SYSTEM TOW CAPACITY

Please note, in order to determine the ***total tow capacity*** of a system, you must consider the weight ratings of each component in that system. This includes, but may not be limited to, the capacity/rating of the ***tow vehicle***, the ***fifth wheel hitch***, and the hitch's ***mounting system***. Actual tow capacity of the system will be equal to the lowest rated component.

Installation Instructions

SPECIFICATIONS

- Fits 2016-2017 Chevy 2500/3500 with Fifth Wheel/Gooseneck OE Tow Prep Kit
- ISR mounting rails are located center of the axle
- SAE J2638 tested and rated to 20K capacity

IMPORTANT: The #4444 OE Adapter is *not* compatible with the #2300 HD SuperGlide hitch

ADAPTER KIT EXPLODED VIEW & PARTS LIST

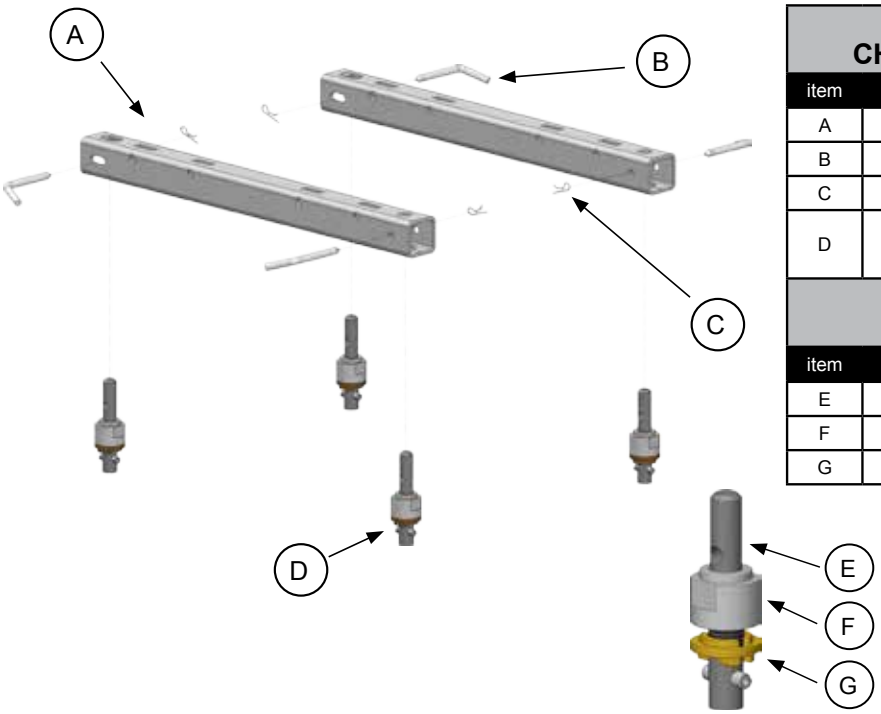

#4444 CHEVY/GMC OE SERIES ADAPTER KIT			
item	description	part no.	qty.
A	CHEVY OE SERIES BASERAIL	44440101	2
B	BASERAIL PIN	08060001	4
C	PIN CLIP	98410127	4
D	CHEVY/GMC OE SERIES MOUNTING POST ASSEMBLY	444401	4

#444401 MOUNTING POST ASSEMBLY *(pre-assembled from factory)*			
item	description	part no.	qty.
E	MOUNTING POST	44440201	1
F	MOUNTING POST NUT	44390402	1
G	MOUNTING WASHER	13070001	1

INSTALLATION

NOTE: Factory installed towing prep kits installed by the manufacturer are not perfectly square to the vehicle's frame and may not be parallel to the back of the cab. To account for these variations in manufacturing, our baserails include an obround hole on each end to account for these tolerances, but in rare cases, may not allow the hitch to fit into the baserails properly.

The basic steps of this installation is as follows:

- *Install mounting post assemblies*
- *Install the base rails to the mounting posts*
- *Install your PullRite fifth wheel hitch*

This adapter works with any PullRite ISR Series hitch or any other manufacturer's ISR-style hitch.

<u>Detailed Installation Instructions</u>

1. Insert a Mounting Post Assembly {D} into each mounting post location *(figure 1)*.
2. Rotate each Mounting Post Assembly 90° or give ¼ of a turn *(figure 2)*.
3. Lightly tighten the Mounting Post Nuts {F} down by hand, securing the posts into position *(figure 3)*.
4. Place a Baserail {A} onto each set of mounting posts. (Note there is a round hole on one end and an obround hole on the other. You should match baserail orientation in the bed with the obround holes on the same side of the truck bed. See exploded view above)
5. Place a Baserail Pin {B} through each Baserail and Mounting Post hole, and lock into place with a Pin Clip {C}.
6. Set your fifth wheel hitch in the corresponding mounting locations and secure with 1/2" hitch pins and clips included with your hitch.
7. Hand tighten each Mounting Post Nut {F} down firmly *(figure 4)*.

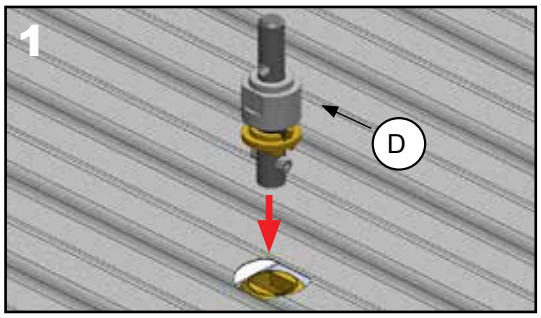

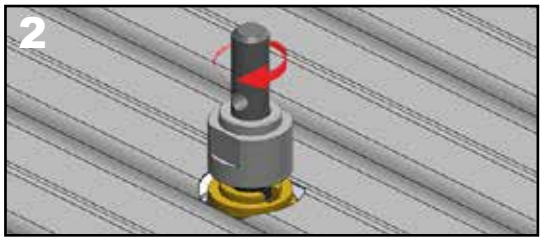

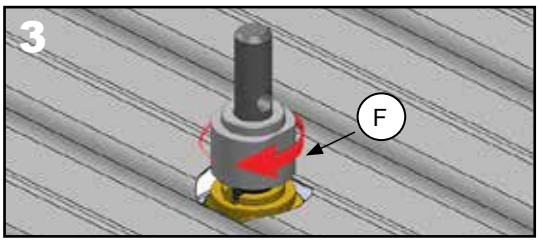

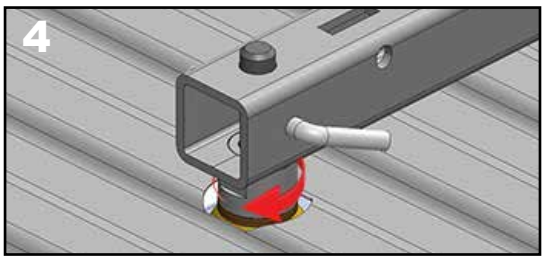

Go to www.pullrite.com/contact-us *to register your product for PullRite's 5 year Limited Warranty eligibility.*